© 2019 TE Connectivity. All Rights Reserved.

REVISIONS					
P	LTR	DESCRIPTION	DATE	DWN	APVD
	A	RELEASE TO PRODUCTION	26AUG2019	AY	PS
	A1	REMOVED TOLERANCE FROM DIM F	17DEC2019	AY	PS
	A2	PARTS OBSOLESCENCE	22JUN2023	BGC	PS

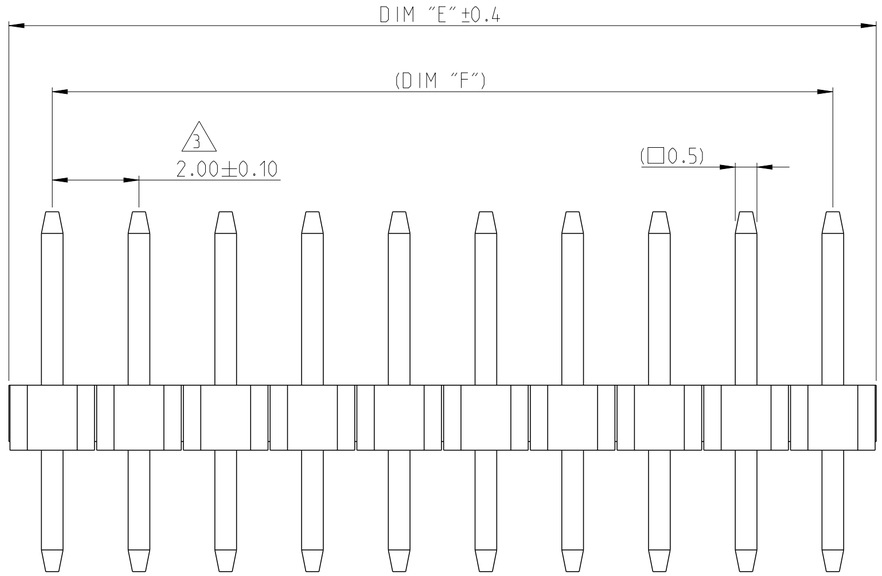

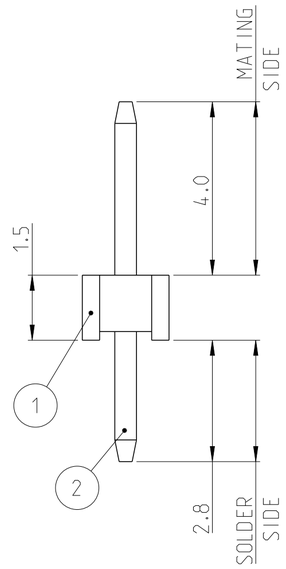

NOTES:
1. MATERIAL
   HOUSING : HIGH TEMPERATURE THERMOPLASTIC, UL94-V0;COLOR- BLACK
   CONTACT PIN : COPPER ALLOY
   FINISH : MIN. 2.0 µm BRIGHT TIN OVER NICKEL UNDER PLATING.
2. PACKAGING: BULK PACK.
3. TOLERANCE NOT CUMULATIVE.
4. CUTTING BURR MAX. 0.25 mm

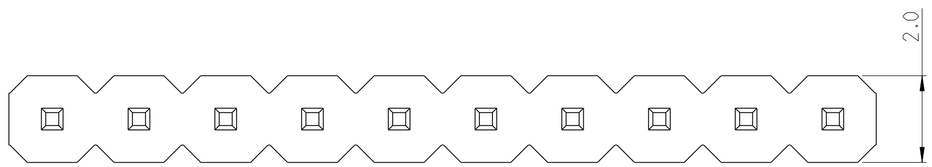

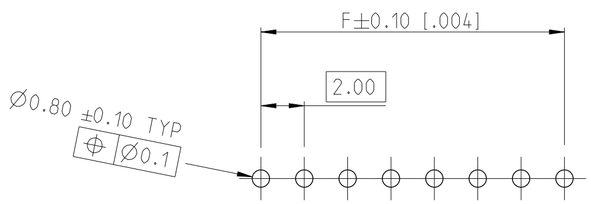

RECOMMENDED PCB HOLE PATTERN FOR THROUGH HOLE WAVE

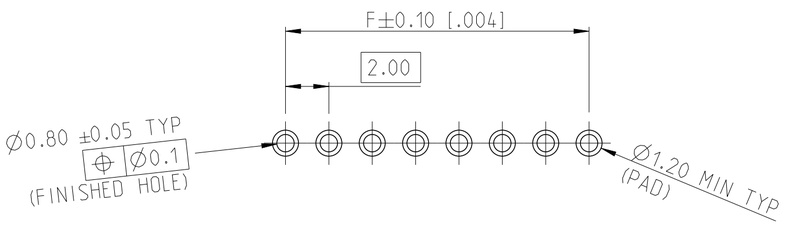

RECOMMENDED PCB HOLE PATTERN FOR THROUGH HOLE REFLOW / PIN-IN-PASTE

1-2355201-0 AS SHOWN

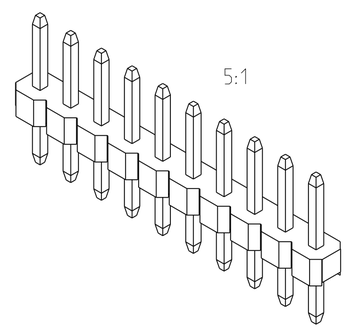

OBSOLETE	48.0	50.0	25	2-2355201-5
	46.0	48.0	24	2-2355201-4
	44.0	46.0	23	2-2355201-3
	42.0	44.0	22	2-2355201-2
	40.0	42.0	21	2-2355201-1
	38.0	40.0	20	2-2355201-0
	36.0	38.0	19	1-2355201-9
	34.0	36.0	18	1-2355201-8
	32.0	34.0	17	1-2355201-7
	30.0	32.0	16	1-2355201-6
	28.0	30.0	15	1-2355201-5
	26.0	28.0	14	1-2355201-4
	24.0	26.0	13	1-2355201-3
	22.0	24.0	12	1-2355201-2
	20.0	22.0	11	1-2355201-1
	18.0	20.0	10	1-2355201-0
	16.0	18.0	9	2355201-9
	14.0	16.0	8	2355201-8
	12.0	14.0	7	2355201-7
	10.0	12.0	6	2355201-6
	8.0	10.0	5	2355201-5
	6.0	8.0	4	2355201-4
	4.0	6.0	3	2355201-3
	2.0	4.0	2	2355201-2
	DIM "F"	DIM "E"	POS	TE PN

CONTACT PIN	2
HOUSING	1
DESCRIPTION	ITEM NO.

THIS DRAWING IS A CONTROLLED DOCUMENT.

DIMENSIONS: mm

TOLERANCES UNLESS OTHERWISE SPECIFIED:
0 PLC ±-
1 PLC ±0.2
2 PLC ±0.15
3 PLC ±-
4 PLC ±-
ANGLES ±2°

MATERIAL: SEE NOTES -
FINISH: SEE NOTES -

DWN RAGHAVENDRA.K 09APR2019
CHK KARTHIK.JK 14AUG2019
APVD PRASHANTH 16AUG2019
PRODUCT SPEC 108-64040
APPLICATION SPEC 114-32259
WEIGHT -

TE Connectivity

NAME: AMPMODU 2mm BREAKAWAY HEADER, SINGLE ROW, VERTICAL, Sn, BULK

SIZE	CAGE CODE	DRAWING NO	RESTRICTED TO
A2	00779	C-2355201	-

CUSTOMER DRAWING | SCALE 10:1 | SHEET 1 OF 1 | REV A2