THIS DRAWING IS UNPUBLISHED | RELEASED FOR PUBLICATION 2020
© COPYRIGHT 2020 TE Connectivity Germany GmbH | ALL RIGHTS RESERVED.

LOC	DIST
–	–

REVISIONS

P	LTR	DESCRIPTION	DATE	DWN	APVD
	B1	ACTIVATE CODING C. D. E AND F	14MAR2023	DK	CS
	B2	MODEL OF COVER UPDATED	26JUN2023	JJ	CS
	C	HOUSING AND TPA UPDATED	19NOV2024	DK	CS
	C1	ACTIVATE CODING G AND H	09APR2025	JJ	CS

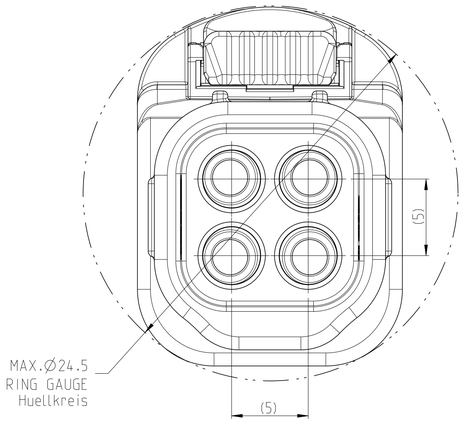

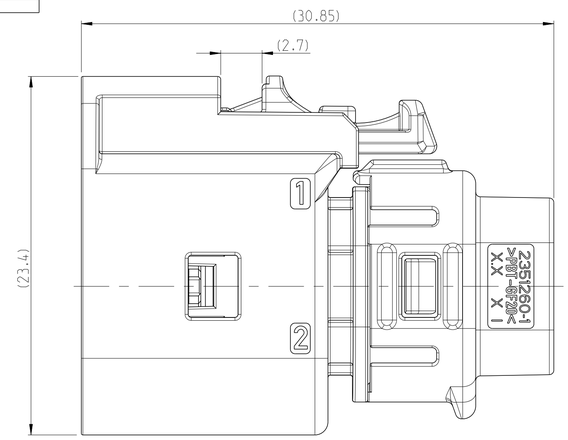

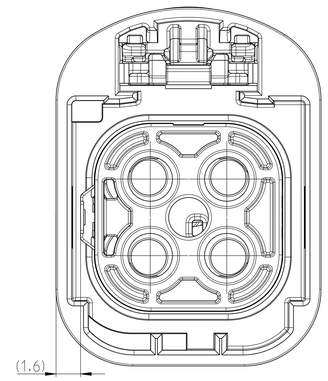

1 DETAILS OF DESIGN ARE LEFT TO TE CONNECTIVITY
Einzelheiten der Ausfuehrung bleiben TE CONNECTIVITY ueberlassen

2 PACKAGING: LOOSE PIECE
Verpackung: Schuettgut

3 TE ORDER NO. X-2354439-Y SEE TABLE
TE Bestellnummer X-2354439-Y siehe Tabelle

4 CODING VARIANCES SEE TABLE
Kodierungsvarianten siehe Tabelle

5 DELIVERY CONDITION: CPA AND TPA IN PRE-LOCKING POSITION.
Anlieferzustand: CPA und TPA in Vorraststellung.

6 SUITABLE CONTACT TE-PN 2298488 AND 2298510
Passender Kontakt TE-PN 2298488 und 2298510

7 SUITABLE CAVITY PLUG TE-PN 2306601-1 TO CLOSE NOT EQUIPPED CAVITIES
Passender Kammerstopfen TE-PN 2306601-1 um nicht benutze Kammern zu verschliessen

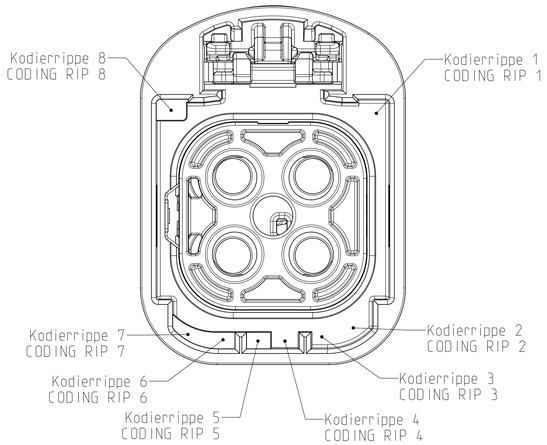

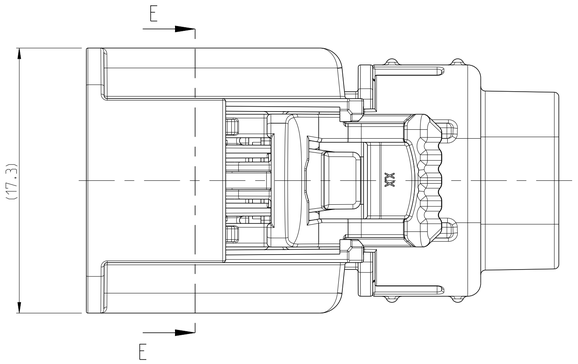

2-2354439-1 CODING "A" AS SHOWN

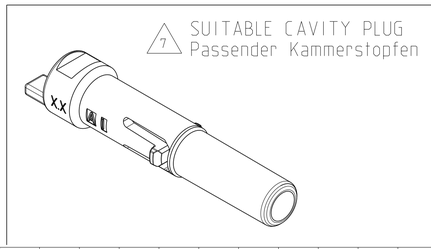

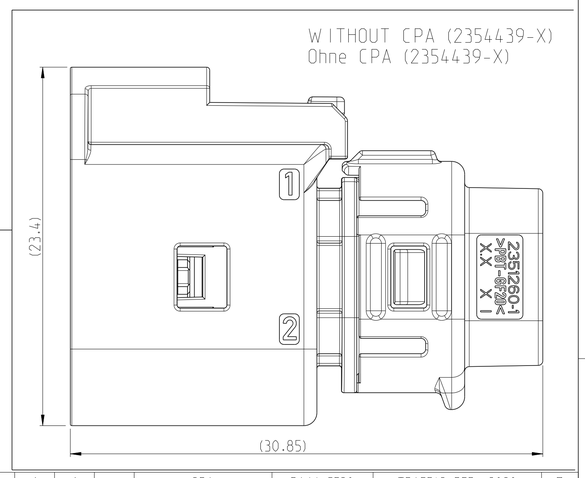

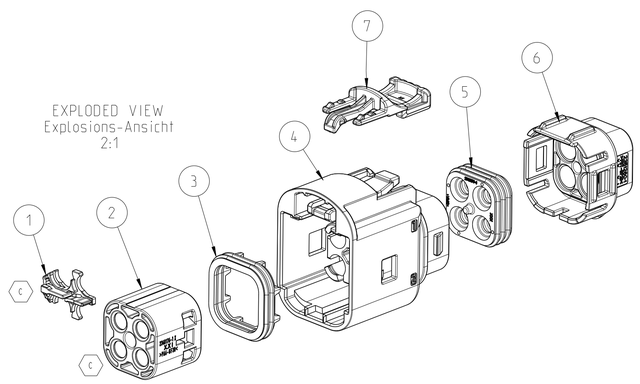

EQUIPPED WITH CAVITY PLUG 7
mit Kammerstopfen bestueckt

SCALE 2:1

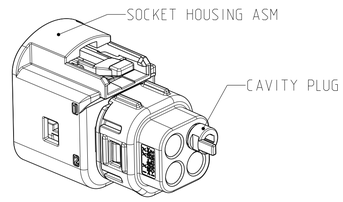

-1	-2	-3	-4	-5	-6	-7	-8	-9	2-1	2-2	2-3	2-4	2-5	2-6	2-7	2-8	2-9					
-	-	-	-	-	-	-	-	-	1	1	1	1	1	1	1	1	1	-	CPA	PA66-GF30	TRAFFIC RED. 3020	7
WITHOUT CPA									WITH CPA									-	COVER	PBT-GF20	JET BLACK. 9005	6
1																		-	GROMMET SEAL	VMQ	LIGHT BLUE. 5012	5
								1									1	Z	SOCKET HOUSING	PA6-GF30	WATER BLUE. 5021	4
							1									1		H			HEATHER VIOLET.4003	
						1									1			G			BLUE GREY. 7031	
					1									1				F			NUT BROWN. 8011	
				1									1					E			MAY GREEN. 6017	
			1									1						D			CLARET VIOLET. 4004	
		1									1							C			LIGHT BLUE. 5012	
	1									1								B			PURE WHITE. 9010	
1									1									A			JET BLACK. 9005	
1																			PERIPHERAL SEAL	VMQ	LIGHT BLUE. 5012	3
1																		-	SOCKET INNER HSG	PA6-GF30	JET BLACK. 9005	2
1																		-	TPA	PBT-GF30	NATURAL	1
QUANTITY																		CODE	DESCRIPTION	MATERIAL	COLOUR, SIMILAR RAL	ITEM NO
5.99									6.19									WEIGHT (g)				
-1	-2	-3	-4	-5	-6	-7	-8	-9	2-1	2-2	2-3	2-4	2-5	2-6	2-7	2-8	2-9	TE ORDER NO X-2354439-Y				
A	B	C	D	E	F	G	H	Z	A	B	C	D	E	F	G	H	Z	CODING				
C	C	C	C	C	C	C	C	C	C	C	C	C	C	C	C	C	C	4 REVISION				

4 ALL CODINGS SIMILAR AS SHOWN IN SECTION E-E/ SCALE 2:1
Alle Kodierungen aehnlich wie dargestellt in Schnitt E-E Masstab 2:1

SCALE 2:1

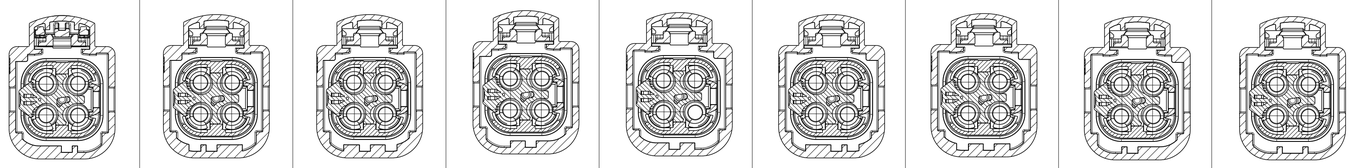

CODING	A	B	C	D	E	F	G	H	Z
CODING RIP CONFIGURATION	5-6-7-8	3-4-7-8	2-4-6-8	2-3-5-8	1-4-6-7	1-2-5-6	1-3-5-7	1-2-3-4	-

THIS DRAWING IS A CONTROLLED DOCUMENT.

DIMENSIONS: mm

TOLERANCES UNLESS OTHERWISE SPECIFIED:
0 PLC ±0.2
1 PLC ±0.2
2 PLC ±0.2
3 PLC ±-
4 PLC ±-
ANGLES ±2

MATERIAL SEE TABLE -
FINISH - -

DWN 23MAR2019 Nelson. R
CHK 23MAR2019 M. Glanzner
APVD 23MAR2019 C. Schrettlinger
PRODUCT SPEC 108-94709
APPLICATION SPEC 114-94468
WEIGHT SEE TABLE

TE Connectivity

NAME MATE-AX.4 POS.SOCKET HSG ASSY.SLD
MATE-AX.4 POL.Buchsengeh Zsb. dicht

SIZE A1 | CAGE CODE 00779 | DRAWING NO C-2354439 | RESTRICTED TO -

CUSTOMER DRAWING | SCALE 5:1 | SHEET 1 OF 1 | REV C1

4805 (3/11)