THIS DRAWING IS UNPUBLISHED. RELEASED FOR PUBLICATION -,- .
© COPYRIGHT - By - ALL RIGHTS RESERVED.

REVISIONS

P	LTR	DESCRIPTION	DATE	DWN	APVD
	A	CREATION	16-JAN-19	GL	-

No scale - sans echelle

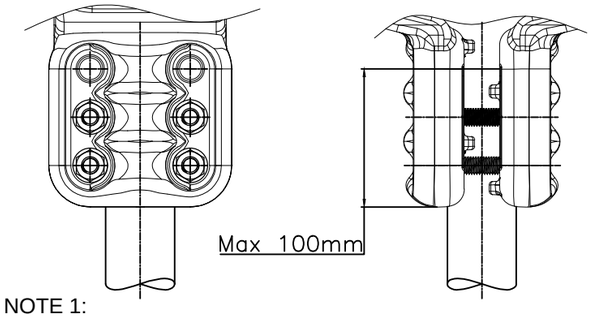

NOTE 1:
Bolts Assembly for Stud length up to 100mm
Assemblage Boulons sur Borne longueur jusqu'à 100mm

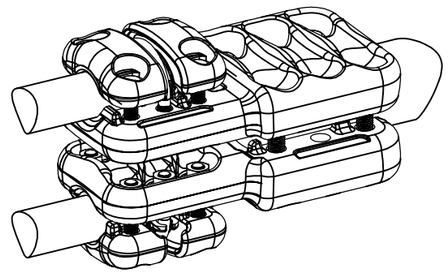

No scale - sans echelle

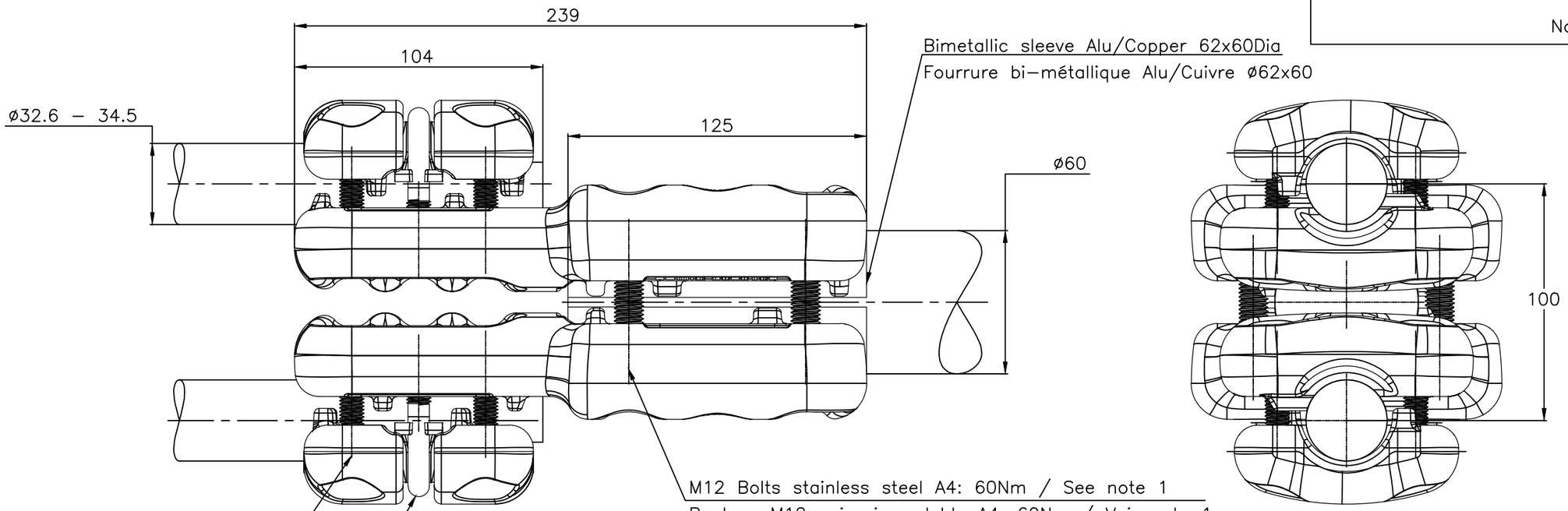

ITEM:.....

THIS DRAWING IS A CONTROLLED DOCUMENT.

DIMENSIONS: mm

TOLERANCES UNLESS OTHERWISE SPECIFIED:
0 PLC ± -
1 PLC ± -
2 PLC ± -
3 PLC ± -
4 PLC ± -
ANGLES ± -

MATERIAL -

FINISH -

DWN LAFORGE 16-JAN-19
CHK -
APVD -
PRODUCT SPEC 108-69096-001
APPLICATION SPEC -
APPROX.WEIGHT 4.7 kg

CUSTOMER DRAWING

TE Connectivity

NAME
Straight connector
Connecteur droit
5 CJ 84 F MR345 E100 LK605

SIZE	CAGE CODE	DRAWING NO	RESTRICTED TO
A3	00779	C-2349902	-

SCALE 1:2 SHEET 1 OF 1 REV A