THIS DRAWING IS UNPUBLISHED. RELEASED FOR PUBLICATION 20-
© COPYRIGHT 2004 Tyco Electronics AMP GmbH ALL RIGHTS RESERVED.

LOC	DIST
A1	-

REVISIONS

P	LTR	DESCRIPTION	DATE	DWN	APVD
	A1	ECR-20-015984	10NOV2020	S.C	J.Z
	A2	ECR-22-160130	02DEC 22	S.X	J.Z
	A4	ECR-22-161631	19DEC 22	S.X	J.Z
	A5	ECN-24-270751	14JUN24	GSK	J.Z

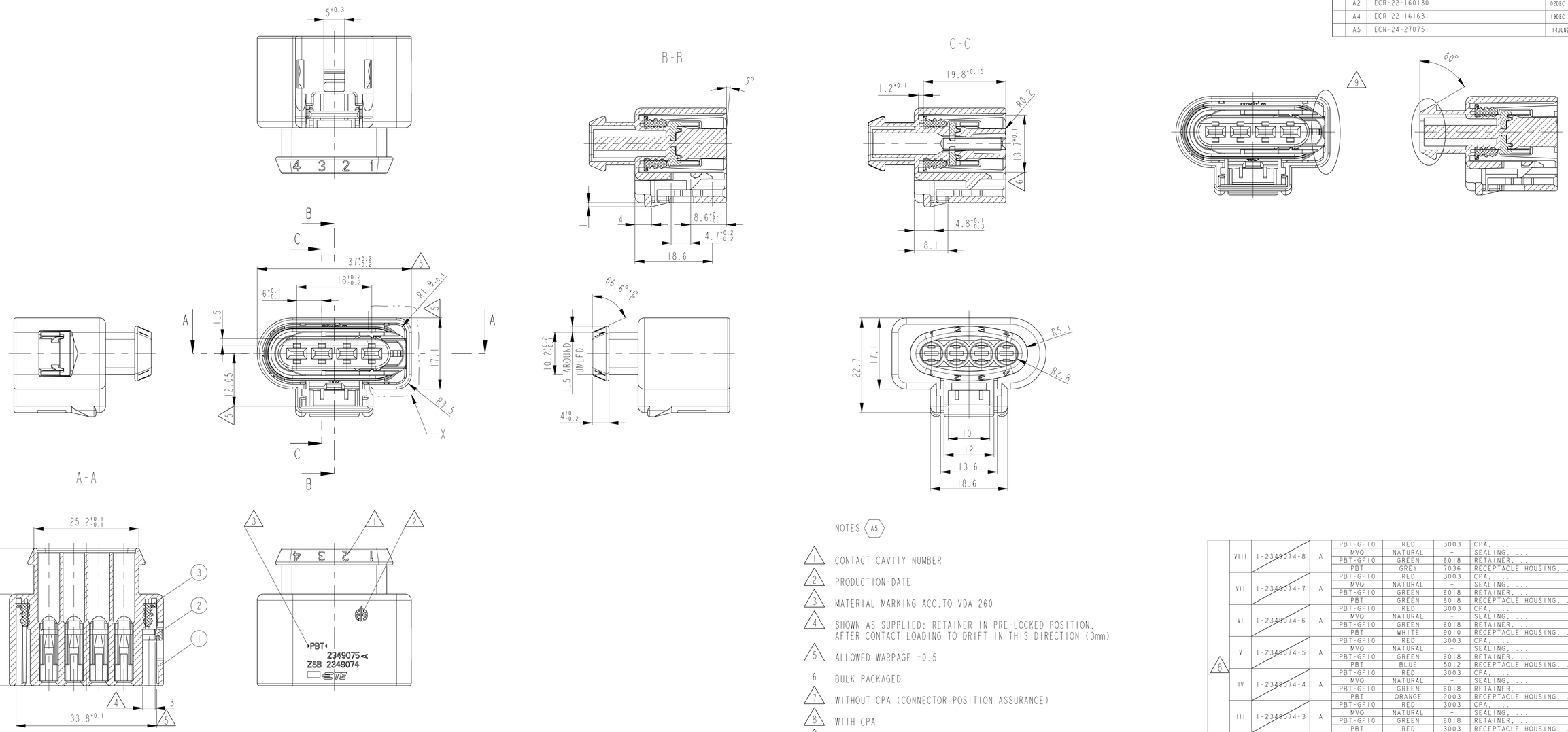

NOTES A5

1. CONTACT CAVITY NUMBER
2. PRODUCTION-DATE
3. MATERIAL MARKING ACC.TO VDA 260
4. SHOWN AS SUPPLIED: RETAINER IN PRE-LOCKED POSITION. AFTER CONTACT LOADING TO DRIFT IN THIS DIRECTION (3mm)
5. ALLOWED WARPAGE ±0.5
6. BULK PACKAGED
7. WITHOUT CPA (CONNECTOR POSITION ASSURANCE)
8. WITH CPA
9. ALLOWED DEVIATIONS FOR PARTS FROM EXISTING MOLD (CAVITY MARKING 1 - 4)
10. THE CONNECTOR MATERIALS,DIMENSIONS,PERFORMANCES BETWEEN 2349074 AND 1718562 ARE ALL THE SAME
11. THE ASSEMBLY 2349074-1 ASSEMBLED F.EX. WITH CONTACT 12441394-1 AND WIRE SEALING 963294-1 WILL HAVE THE COUNTERPART 1-966718-1 OR A SUITABLE MATING PART ACC.TO...

CODINGS

X
1:1

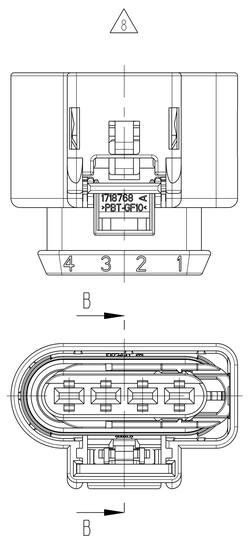

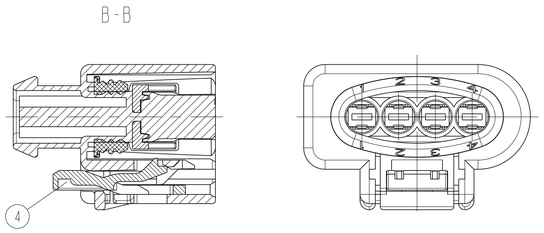

	COD	TE-NO	REV	MATERIAL	COLOR	RAL-NO	DESCRIPTION	QTY	ITEM NO
8	VIII	1-2349074-8	A	PBT-GF10	RED	3003	CPA, ...	1	4
				MVQ	NATURAL	-	SEALING, ...	1	3
				PBT-GF10	GREEN	6018	RETAINER, ...	1	2
				PBT	GREY	7036	RECEPTACLE HOUSING, ...	1	1
	VII	1-2349074-7	A	PBT-GF10	RED	3003	CPA, ...	1	4
				MVQ	NATURAL	-	SEALING, ...	1	3
				PBT-GF10	GREEN	6018	RETAINER, ...	1	2
				PBT	GREEN	6018	RECEPTACLE HOUSING, ...	1	1
	VI	1-2349074-6	A	PBT-GF10	RED	3003	CPA, ...	1	4
				MVQ	NATURAL	-	SEALING, ...	1	3
				PBT-GF10	GREEN	6018	RETAINER, ...	1	2
				PBT	WHITE	9010	RECEPTACLE HOUSING, ...	1	1
	V	1-2349074-5	A	PBT-GF10	RED	3003	CPA, ...	1	4
				MVQ	NATURAL	-	SEALING, ...	1	3
				PBT-GF10	GREEN	6018	RETAINER, ...	1	2
				PBT	BLUE	5012	RECEPTACLE HOUSING, ...	1	1
	IV	1-2349074-4	A	PBT-GF10	RED	3003	CPA, ...	1	4
				MVQ	NATURAL	-	SEALING, ...	1	3
				PBT-GF10	GREEN	6018	RETAINER, ...	1	2
				PBT	ORANGE	2003	RECEPTACLE HOUSING, ...	1	1
	III	1-2349074-3	A	PBT-GF10	RED	3003	CPA, ...	1	4
				MVQ	NATURAL	-	SEALING, ...	1	3
				PBT-GF10	GREEN	6018	RETAINER, ...	1	2
				PBT	RED	3003	RECEPTACLE HOUSING, ...	1	1
	II	1-2349074-2	A	PBT-GF10	RED	3003	CPA, ...	1	4
				MVQ	NATURAL	-	SEALING, ...	1	3
				PBT-GF10	GREEN	6018	RETAINER, ...	1	2
				PBT	DARK BROWN	8012	RECEPTACLE HOUSING, ...	1	1
	I	1-2349074-1	A	PBT-GF10	RED	3003	CPA, ...	1	4
				MVQ	NATURAL	-	SEALING, ...	1	3
				PBT-GF10	GREEN	6018	RETAINER, ...	1	2
				PBT	BLACK	9011	RECEPTACLE HOUSING, ...	1	1
7	VIII	2349074-8	A	MVQ	NATURAL	-	SEALING, ...	1	3
				PBT-GF10	GREEN	6018	RETAINER, ...	1	2
				PBT	GREY	7036	RECEPTACLE HOUSING, ...	1	1
	VII	2349074-7	A	MVQ	NATURAL	-	SEALING, ...	1	3
				PBT-GF10	GREEN	6018	RETAINER, ...	1	2
				PBT	GREEN	6018	RECEPTACLE HOUSING, ...	1	1
	VI	2349074-6	G	MVQ	NATURAL	-	SEALING, ...	1	3
				PBT-GF10	GREEN	6018	RETAINER, ...	1	2
				PBT	WHITE	9010	RECEPTACLE HOUSING, ...	1	1
	V	2349074-5	A	MVQ	NATURAL	-	SEALING, ...	1	3
				PBT-GF10	GREEN	6018	RETAINER, ...	1	2
				PBT	BLUE	5012	RECEPTACLE HOUSING, ...	1	1
	IV	2349074-4	A	MVQ	NATURAL	-	SEALING, ...	1	3
				PBT-GF10	GREEN	6018	RETAINER, ...	1	2
				PBT	ORANGE	2003	RECEPTACLE HOUSING, ...	1	1
	III	2349074-3	A	MVQ	NATURAL	-	SEALING, ...	1	3
				PBT-GF10	GREEN	6018	RETAINER, ...	1	2
				PBT	RED	3003	RECEPTACLE HOUSING, ...	1	1
	II	2349074-2	A	MVQ	NATURAL	-	SEALING, ...	1	3
				PBT-GF10	GREEN	6018	RETAINER, ...	1	2
				PBT	DARK BROWN	8012	RECEPTACLE HOUSING, ...	1	1
	I	2-2349074-1	A	MVQ	NATURAL	-	SEALING, ...	1	3
				PBT-GF10	GREEN	6018	RETAINER, ...	1	2
				PBT	BLACK	9011	RECEPTACLE HOUSING, ...	1	1
	I	2349074-1	A	MVQ	NATURAL	-	SEALING, ...	1	3
				PBT-GF10	GREEN	6018	RETAINER, ...	1	2
				PBT	BLACK	9011	RECEPTACLE HOUSING, ...	1	1

THIS DRAWING IS A CONTROLLED DOCUMENT.

DIMENSIONS: mm

TOLERANCES UNLESS OTHERWISE SPECIFIED: 0 PLC ±; 1 PLC ±; 2 PLC ±; 3 PLC ±; ANGLES ±1°; ACC.TO DIN 16901-140 CENTRIC TO NOMINAL DIM

MATERIAL S.TAB.

FINISH S.TAB.

DWN	S. CUI	11DEC2018
CHK	J. ZONG	11DEC2018
APVD	L. YIN	11DEC2018

PRODUCT SPEC 108-18180

APPLICATION SPEC 114-94180

WEIGHT 10.6 g

TE Connectivity

NAME REC. HSG. ASSY,4 POS.,RD,AMP MCP2.8K

SIZE	CAGE CODE	DRAWING NO	RESTRICTED TO
A1	00779	C-2349074	-

CUSTOMER DRAWING

SCALE	SHEET	OF	REV
2:1	1	1	A5

4805 (3/11)