THIS DRAWING IS UNPUBLISHED. RELEASED FOR PUBLICATION 2021
© COPYRIGHT 2021 TYCO ELECTRONICS CORPORATION. ALL RIGHTS RESERVED.

REVISIONS					
P	LTR	DESCRIPTION	DATE	DWN	APVD
	A	RELEASED PER ECO-21-004564	08APR2021	JMS	CRR
	A1	REV PER ECN-22-144229	24MAR2022	SMR	CM

1. MATERIAL: COPPER ALLOY, PRE-PLATED WITH 0.80µm MIN TIN
2. TERMINAL HAS LUBRICANT APPLIED. THIS IS A WHITISH COLORED LUBE. AMOUNT AND VISIBILITY MAY VARY.
3. DATE CODE (WEEK/YEAR)
4. BARREL SIZE ID, SEE TABLE
5. MAX 7 TERMINAL MISSING PER REEL PERMITTED
6. 3 LOOSE SPLICES PER REEL ALLOWED
7. DIE IDENTIFICATION NUMBER
8. OPTIONAL FEATURE
9. OPTIONAL INDENTATION PERMISSIBLE IN THIS GENERAL LOCATION.
10. THIS TERMINAL INTENDED FOR TEMPERATURE CLASS T2 (-40°C TO +105°C) AND VIBRATION CLASS V1
11. RECOMMENDED MATING PIN TIP GEOMETRY PER USCAR EWCAP-001, 0.75-1.5µm TIN OVER 0.76µm MIN NICKEL
12. 2340441-2 SHOWN

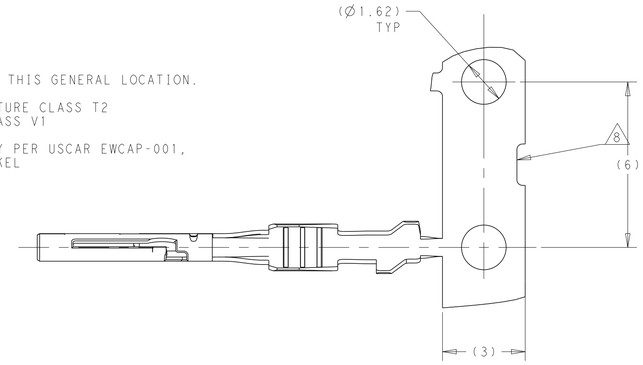

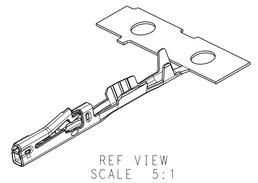

REF VIEW
SCALE 5:1

REQUIRED REELING DIRECTION
FOR TE APPLICATORS

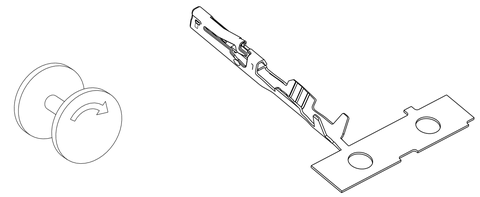

DETAIL Z
SCALE 5:1

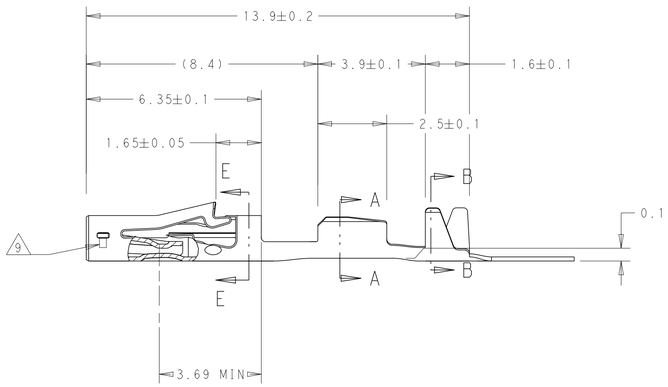

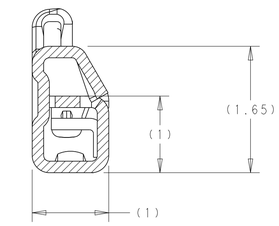

SECTION E-E
SCALE 25:1

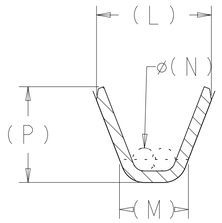

SECTION A-A
SCALE 25:1

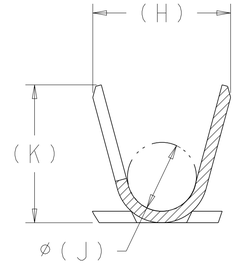

SECTION B-B
SCALE 25:1

2340441-2 SHOWN

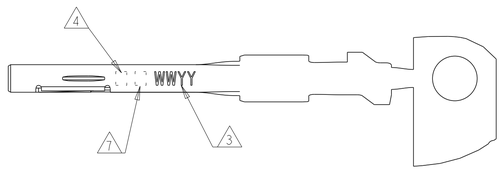

N	SEE DETAIL Z	1.5	0.3	1.05	1.7	1.9	0.9	1.9	1.00 TO 1.40	0.35mm², 7 STRAND	2340441-2
S	SEE DETAIL Z	1.25	0.3	0.9	1.6	1.8	0.9	1.9	0.85 TO 1.05	0.13mm², 7 STRAND	2340441-1
MARKING 4	REELING	P	N	M	L	K	J	H	INSULATION O.D.	CONDUCTOR	PART NO
									WIRE		

THIS DRAWING IS A CONTROLLED DOCUMENT.

DIMENSIONS: mm

TOLERANCES UNLESS OTHERWISE SPECIFIED:
0 PLC ±-
1 PLC ±0.15
2 PLC ±0.15
3 PLC ±-
4 PLC ±-
ANGLES ±-

MATERIAL 1
FINISH - -

DWN H. MOLL 31JUL2018
CHK F. KINSEY 1AUG2018
APVD F. KINSEY 1AUG2018
PRODUCT SPEC -
APPLICATION SPEC 114-32153
WEIGHT 0.08 g

TE Connectivity

NAME RECEPTACLE, TERMINAL, UNSEALED, GENERATION 50, LOCKING LANCE

SIZE A1 | CAGE CODE - | DRAWING NO C-2340441 | RESTRICTED TO -

CUSTOMER DRAWING | SCALE 9:1 | SHEET 1 OF 1 | REV A1

4805 (3/13)