THIS DRAWING IS UNPUBLISHED. RELEASED FOR PUBLICATION 20
© COPYRIGHT 20 BY - ALL RIGHTS RESERVED.

REVISIONS

P	LTR	DESCRIPTION	DATE	DWN	APVD
	A	RELEASED	26MAR2019	CH	YJ
	A1	REVISED (ECR-25-241925)	23JAN2024	CH	YH

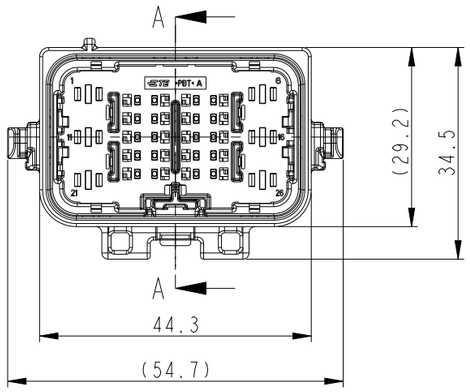

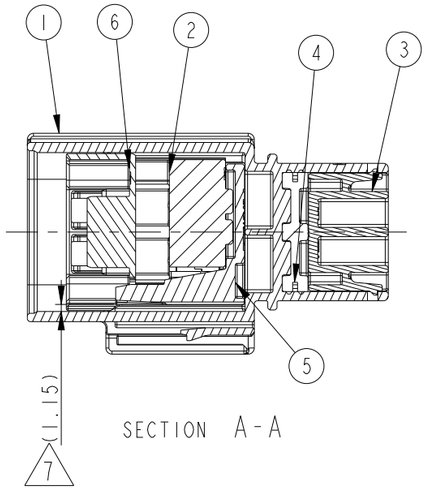

SECTION A-A

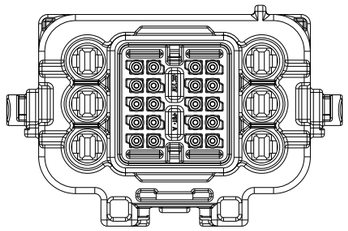

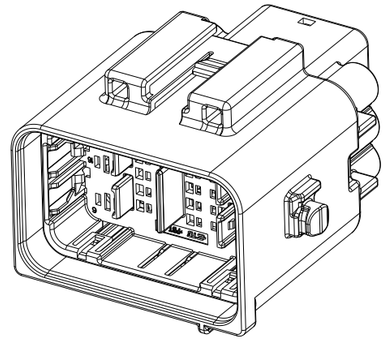

3D VIEW
SCALE 1:1

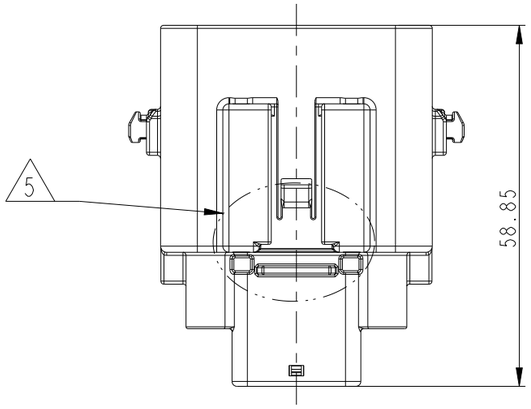

NOTE ;
1. GENERAL TOLERANCE : ±0.3, ±2.0°
2. APPLICABLE TAB CONTACT : SEE TABLE 1.
3. APPLICABLE PLUG ASS'Y P/N : 2334242
4. MATING COVER P/N : 2334257
5. APPLLICABLE CLIP : SEE TABLE 2
6. UNOCCUFIED 050 CHAMBERS SHOULD BE CLOSED WITH BLIND PLUG
   APPLICABLE BLIND PLUG : 2109258-4
7. DBL SUPPLY CONDITION : 1'ST LOCKING.
8. MAX 0.2 WARPAGE ALLOWED

TABLE 1

TAB	PART NO.	WIRE SIZE(SQ)	INSULATION DIA(mm)
050	1718348-1	0.3~0.35	1.5-1.75
	1718350-1	0.5~0.75	1.4-1.9
110	1-962915-1	0.5~1.0	1.4~2.1
	1-962916-1	1.25~2.5	2.2~3.1
	A1 1-1719506-1	3.0	3.7~3.9

DESCRIPTION	110 SINGLE WIRE SEAL A1			CAVITY PLUG
P/N	828904-1	828905-1	2473064-1	828922-1
INSULATION DIA(Ø)	1.2-2.1	2.2-3.1	3.7-3.9	-

TABLE 2

CLIP TYPE 1 (2334250-X)	CLIP TYPE 2 (1-2334250-X)
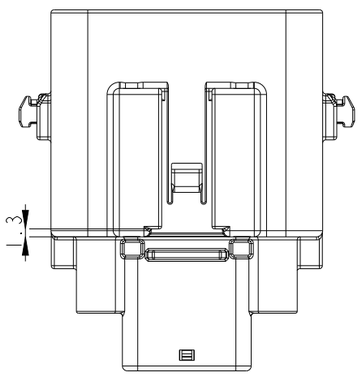	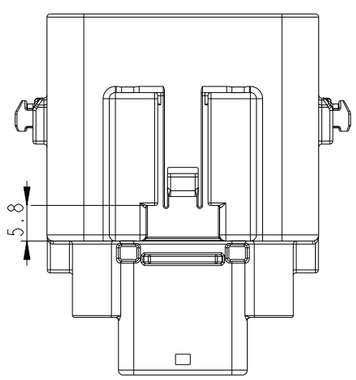
CLIP P/N :1743455, 936784	CLIP P/N :2188213

NO	COLOR	MATERIAL	DESCRIPTION	050/110 HYB 26P CAP ASSY	050/110 HYB 26P CAP ASSY-GREEN	050/110 HYB 26P CAP ASSY-TYPE2-GRAY
				Q'TY		
6	BROWN	PBT	CAP DBL HSG	1	1	1
5	NATURAL	PBT	MOVING PLATE HSG	1	1	1
4	RED	SILICONE	FAMILY SEAL	1	1	1
3	BROWN	PBT	SEAL HOLDER HSG	1	1	1
2	BLACK	PBT-GF15	CAP CAVITY HSG	1	1	1
1-2	GRAY	PBT	CAP HSG-TYPE2	-	-	1
1-1	GREEN	PBT	CAP HSG(GREEN)	-	1	-
1	BLACK	PBT	CAP HSG	1	-	-
			DESCRIPTION	2334250-2	2334250-7	1-2334250-3
			ASS'Y P/N			

THIS DRAWING IS A CONTROLLED DOCUMENT.

DIMENSIONS: mm

TOLERANCES UNLESS OTHERWISE SPECIFIED:
0 PLC ±
1 PLC ±
2 PLC ±
3 PLC ±
4 PLC ±
ANGLES ±

MATERIAL: SEE TABLE
FINISH: N/A

DWN: CH CHO
CHK: DG JEONG
APVD: YJ YOUN
PRODUCT SPEC: 108-61423
APPLICATION SPEC: 411-61073
WEIGHT: 35.33g

TE Connectivity

NAME: 050/110 HYB 26P CAP ASSY
-

SIZE	CAGE CODE	DRAWING NO	RESTRICTED TO
A3	00779	C-2334250	-

CUSTOMER DRAWING | SCALE 1:1 | SHEET 1 OF 1 | REV A1

1470-19 (3/13)