THIS DRAWING IS UNPUBLISHED. RELEASED FOR PUBLICATION -,- .
© COPYRIGHT - By - ALL RIGHTS RESERVED.

REVISIONS

P	LTR	DESCRIPTION	DATE	DWN	APVD
	A	CREATION	21-NOV-17	GL	—

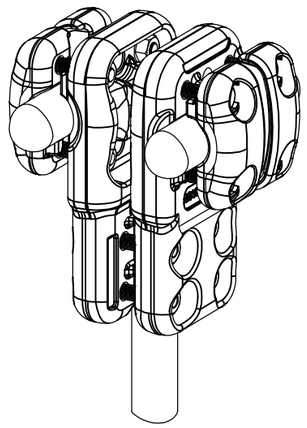

No scale
Sans échelle

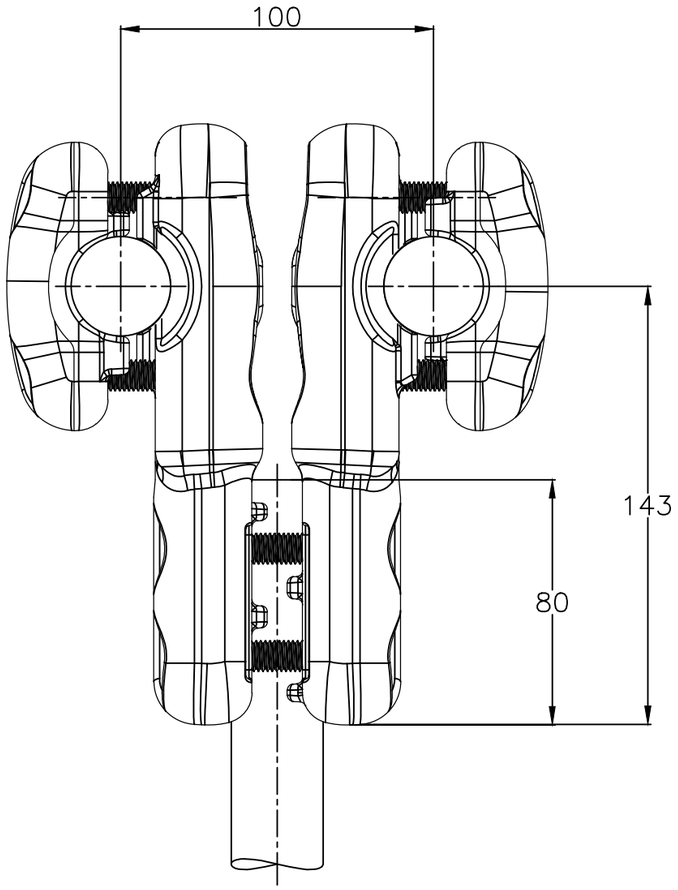

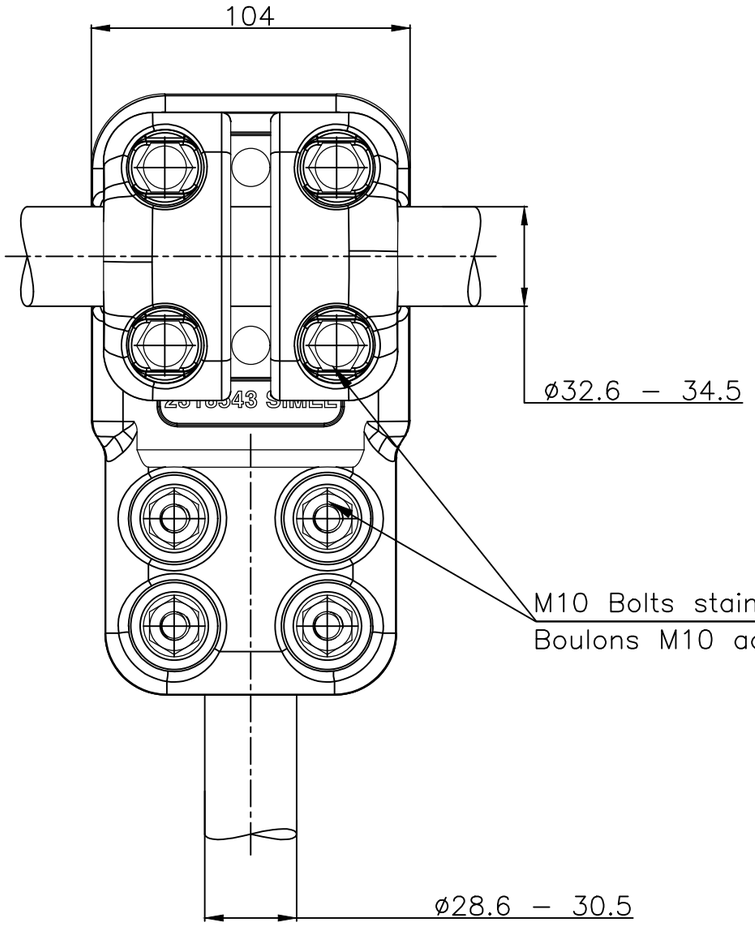

M10 Bolts stainless steel A2: 37Nm
Boulons M10 acier inoxydable A2: 37Nm

ITEM:.....

THIS DRAWING IS A CONTROLLED DOCUMENT.		DWN LAFORGE 21-NOV-17	TE Connectivity
DIMENSIONS: mm	TOLERANCES UNLESS OTHERWISE SPECIFIED: 0 PLC ± – 1 PLC ± – 2 PLC ± – 3 PLC ± – 4 PLC ± – ANGLES ± –	CHK –	
		APVD –	NAME TEE CONNECTOR CONNECTEUR EN TE
		PRODUCT SPEC 108-69096-001	5 CT 82 F M345 E100 S305
		APPLICATION SPEC –	SIZE A3 / CAGE CODE 00779 / DRAWING NO C-2328135 / RESTRICTED TO –
MATERIAL –	FINISH –	APPROX.WEIGHT 3.37 kg	
		CUSTOMER DRAWING	SCALE 1:2 / SHEET 1 OF 1 / REV A

1470-19 (1/15)