THIS DRAWING IS UNPUBLISHED. RELEASED FOR PUBLICATION 2017
© COPYRIGHT 2017 TE Connectivity Germany GmbH ALL RIGHTS RESERVED.

REVISIONS

P	LTR	DESCRIPTION	DATE	DWN	APVD
	A	INITIAL RELEASE	22JUN2018	AHM	BD
	A1	UPDATE	02OCT2018	EC	BD
	A2	PILOT PN 9- OBSOLETED	04APR2022	EC	BD
	B	SEAL MATERIAL CHANGE	10OCT2022	EC	BD

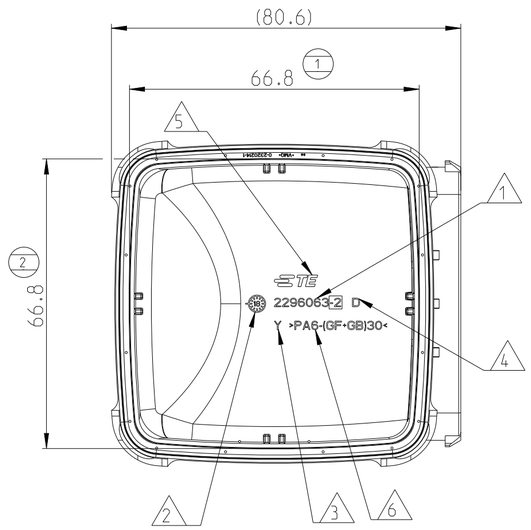

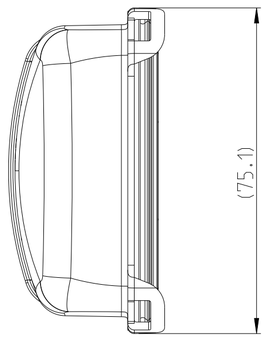

NOTES

1. TE SINGLE COMPONENT PART NUMBERS = P/N
2. PRODUCTION DATE WITH DATE INSERT MONTH/YEAR (NOT FOR SEAL)
3. CAVITY MARKING (BY FIGURE ON COVER, BY DOT ON SEAL)
4. PART REVISION (BY LETTER ON COVER, BY DOT ON SEAL)
5. TE-TRADEMARK (NOT FOR PILOT SEAL)
6. MATERIAL MARKING
7. PACKAGING ACCORDING TO SPEC. 107-15764
8. ~~COMPONENT OUT OF PILOT PROCESS/TOOL~~

P/N 2320073-1
AS SHOWN

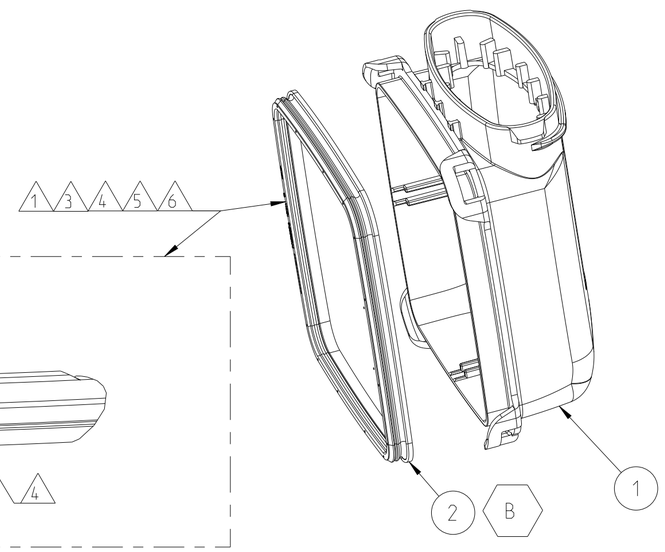

A-A

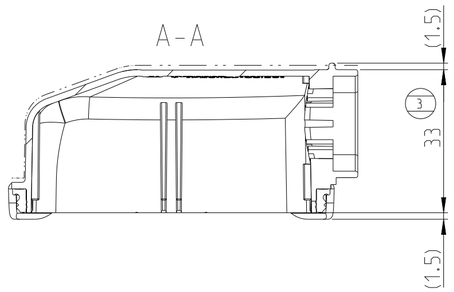

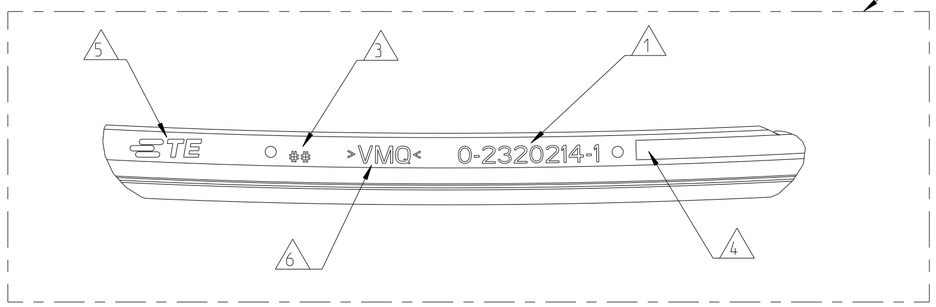

TE P/N AND QUANTITY PER ASSEMBLY		COMPONENT			
~~8 1~~	1	PERIPHERAL SEAL	2	VMQ (SILICONE RUBBER)	LIGHT BLUE
~~1~~	1	CABLE EXIT, RECT 90DEG	1	PA6 GF10+GB20	ORANGE
~~8 9-2320073-1~~	2320073-1	DESCRIPTION	ITEM NO	MATERIAL	SURFACE/ COLOR
~~A~~	B (B)	REVISION OF EACH ASSEMBLY			

THIS DRAWING IS A CONTROLLED DOCUMENT.

DIMENSIONS: mm

TOLERANCES UNLESS OTHERWISE SPECIFIED:
0 PLC ±
1 PLC ±
2 PLC ± 0.5
3 PLC ±
4 PLC ±
ANGLES ± 2°

MATERIAL: SEE TABLE
FINISH: -

DWN Aravind H.M 15MAY2017
CHK Vishwa A 15MAY2017
APVD B. Dupont 22FEB2018
PRODUCT SPEC -
APPLICATION SPEC -
WEIGHT 28g

TE Connectivity

NAME COVER ASSY,CABLE EXIT, 90DEG

SIZE A2 | CAGE CODE 00779 | DRAWING NO C-2320073 | RESTRICTED TO -

CUSTOMER DRAWING | SCALE 1:1 | SHEET 1 OF 1 | REV B