THIS DRAWING IS UNPUBLISHED. RELEASED FOR PUBLICATION 20
© COPYRIGHT 20 BY - ALL RIGHTS RESERVED.

REVISIONS

P	LTR	DESCRIPTION	DATE	DWN	APVD
	B	REVISED(ECR-19-002837)	17.MAY'19	JH	GC

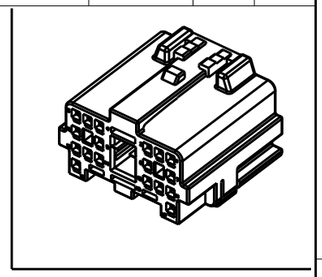

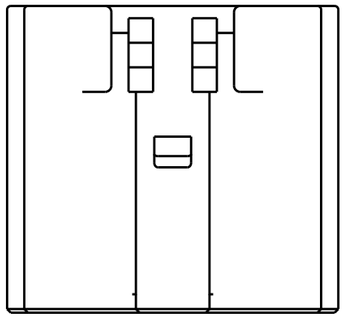

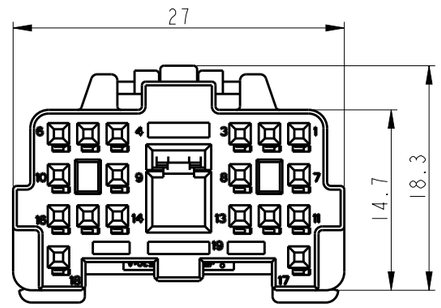

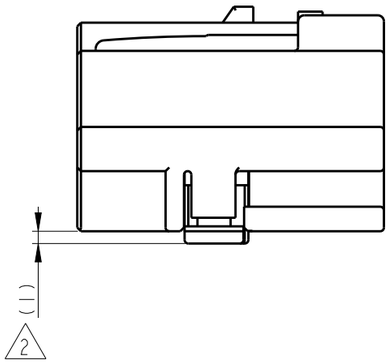

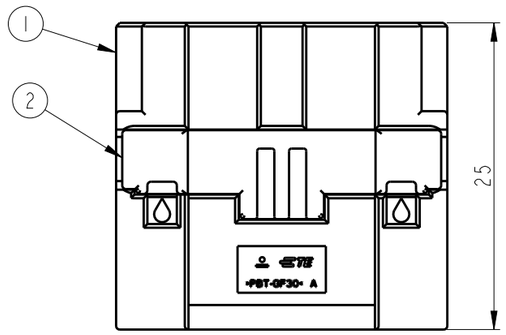

TABLE 1.

CONTACT	PART NO.	WIRE SIZE(SQ) /DESCRIPTION
.025 TH	2188446-1	0.22
	2188446-2	0.3~0.5
5 RF	2005000-3	REC DIELECTRIC
	2-2005001-3	REC SHIELD
A1	1-2005002-1	REC CONTACT

NOTE
1. GENERAL TOLERANCE : ±0.3,±3°
2. DELIVERY CONDITION : DBL 1st LOCK
3. APPLICABLE RECEPTACLE CONTACT : SEE TABLE 1
4. APPLICABLE CAP P/N : 2319294
5. APPLICABLE COAXIAL CABLE : 1.5D-EXHV-AS

NO.	COLOR/FINISH	MATERIAL	DESCRIPTION	P/N	Q'TY
2	BLACK	PBT-GF30	19P PLUG DBL	2319309-2	1
1	NATURAL	PBT-GF30	19P PLUG HSG NAT	2319308-1	1

ASS'Y P/N	DESCRIPTION
2319297-1	025/RF 19P PLUG ASSY NAT

THIS DRAWING IS A CONTROLLED DOCUMENT.

DIMENSIONS: mm

TOLERANCES UNLESS OTHERWISE SPECIFIED:
0 PLC ±-
1 PLC ±0.1
2 PLC ±0.01
3 PLC ±0.001
4 PLC ±0.0001
ANGLES ±-

MATERIAL -
FINISH -

DWN JH KIM -
CHK GC KWON -
APVD GC KWON -
PRODUCT SPEC -
APPLICATION SPEC -
WEIGHT -

TE Connectivity

NAME
-
025/RF 19P PLUG ASS'Y
-

SIZE	CAGE CODE	DRAWING NO	RESTRICTED TO
A3	00779	C-2319297	-

CUSTOMER DRAWING | SCALE 2:1 | SHEET 1 OF 1 | REV B