THIS DRAWING IS UNPUBLISHED. RELEASED FOR PUBLICATION 20
© COPYRIGHT 20 BY - ALL RIGHTS RESERVED.

REVISIONS

P	LTR	DESCRIPTION	DATE	DWN	APVD
	A	RELEASED PER ECO 17-010652	7-24-17	CT	DW
	B	REVISED PER ECN-21-109591	21JUL2021	LN	PD
	C	REVISED PER ECN-23-241733	05MAR2024	LP	PD

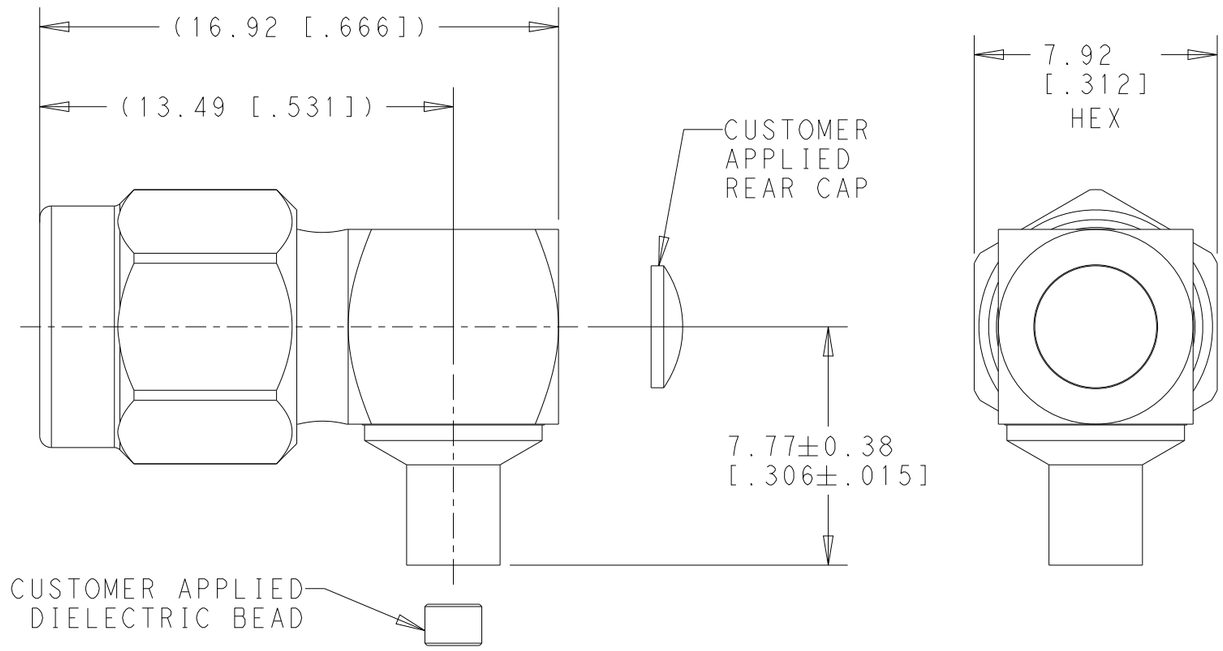

1. DESIGN FOR USE WITH .086 CABLE WITH A .0253 DIA CENTER CONDUCTOR.

2. USE INSTRUCTION SHEET 408-TBD.

3. DESIGN FOR USE WITH .086 CABLE WITH A .0226 DIA CENTER CONDUCTOR

WARNING - THIS DOCUMENT CONTAINS TECHNOLOGY WHOSE EXPORT IS RESTRICTED BY THE EXPORT ADMINISTRATION REGULATIONS ("EAR") PURSUANT TO 15 C.F.R. PARTS 730-774. VIOLATIONS OF THE EAR ARE SUBJECT TO SEVERE CRIMINAL PENALTIES UNDER THE EXPORT CONTROL REFORM ACT, AS AMENDED (TITLE 50, U.S.C., SEC. 4801, ET SEQ.).

ELECTRICAL

NOM. IMPEDANCE (OHMS)	50
Freq. Range (GHz)	DC to 18
Volt Rating (VRMS MAX)	
@ Sea Level	335
VSWR	1.18+.015f(GHz) DC to 18 GHz
Insertion Loss (db Max)	.05x SQRT.f(GHz)
RF Leakage (db MIN) (Interface Only, Fully Mated)	-70 @ 2-3 GHz
Corona, 70,000Ft.(VRMS MIN)	250
Dielectric Withstanding Voltage (VRMS MIN)@ Sea Level	1000
Contact Resistance (Millohms MAX)	
Center Contact	4.0
Outer Contact	2.0
Cable to Housing	0.5
RF High Potential @ Sea Level (VRMS MIN @ 5MHz)	670
IR (Megohms MIN)	5000

MECHANICAL

Interface Dimensions	MIL-STD-348,Fig. 310.1
Mating Characteristics:	
Insertion (MAX Lbs)	N/A
Withdrawal (MIN Oz)	N/A
Force to Engage (In-Lbs MAX)	2.0
& Disengage (In-Lbs MAX)	2.0
Center Contact Captivation	
Axial (Lbs)	6
Cable Retention	
Axial force (Lbs MIN)	30
Recommended Mating Torque (In-Lb)	7-10
Weight (Grams)	TBD

ENVIRONMENTAL

TEMP. RATING	-65° TO +165°C
Vibration MIL-STD-202, Method 204, Condition D	
Shock MIL-STD-202, Method 213 Condition 1	
Thermal Shock MIL-STD-202, Method 107, Condition B EXCEPT HIGH TEMP +115°C	
Moisture Resistance MIL-STD-202 Method 106	
Corrosion - MIL-STD-202, Method 101, Condition B, 5% salt spray	

COMPONENT	MATERIAL	FINISH
HOUSING COUPLING NUT CAP	STAINLESS STEEL PER ASTM-A-484 OR ASTM-A-582 TYPE 303	GOLD PLATED PER ASTM-B-488
DIELECTRIC	PTFE FLUORCARBON PER ASTM-D-1457	NONE
CENTER CONTACT	BERYLLIUM COPPER PER ASTM-B-196 OR 197 ALLOY C17300, COND H	GOLD PLATED PER ASTM-B-488
RETAINING RING	BERYLLIUM COPPER PER ASTM-B-194	NONE
GASKET	SILICONE RUBBER PER ZZ-R-765	NONE
DIELECTRIC BEAD	POLYAMIDE-IMIDE PER ASTM-D-5204	NONE

WIRE TYPE	PART NO
3	2315476-2
1	2315476-1

THIS DRAWING IS A CONTROLLED DOCUMENT.

DIMENSIONS: mm [INCH]

TOLERANCES UNLESS OTHERWISE SPECIFIED:
0 PLC ±-
1 PLC ±-
2 PLC ±-
3 PLC ±0.13 [.005]
4 PLC ±-
ANGLES ±1°

MATERIAL SEE TABLE
FINISH SEE TABLE

DWN 23MAY2017 Brent D. Yohn
CHK 23MAY2017 Denver Wilson
APVD 24MAY2017 D.WILSON
PRODUCT SPEC -
APPLICATION SPEC -
WEIGHT -

TE Connectivity

NAME SMA RIGHT ANGLE PLUG, FOR LOW LOSS .086
-

SIZE	CAGE CODE	DRAWING NO	RESTRICTED TO
A3	00779	C-2315476	-

CUSTOMER DRAWING SCALE 5:1 SHEET 1 OF 1 REV C

1470-19 (3/13)