THIS DRAWING IS UNPUBLISHED. RELEASED FOR PUBLICATION 2014
© COPYRIGHT 2014 Tyco Electronics AMP GmbH ALL RIGHTS RESERVED.

REVISIONS					
F	LTR	DESCRIPTION	DATE	DWN	APVD
	A	NEW DRAWING	11DEC2017	LLÖ	RPU
	A1	TE-ORDER-NO. MOVED (NOTE 13)	23JUL2018	CLA	RPU
	B	Cover and seal: material change:			
		Dimension Ø3.55±0.05 added	05NOV2024	KSC	RPU

CODINGS
Kodierungen
2:1

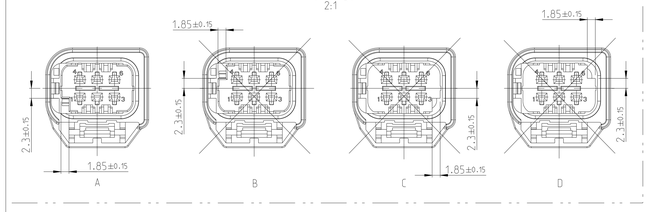

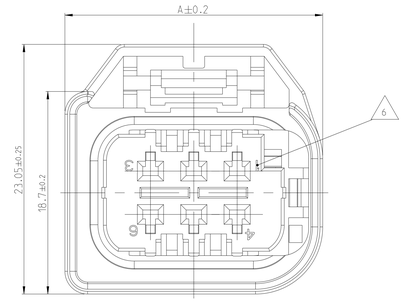

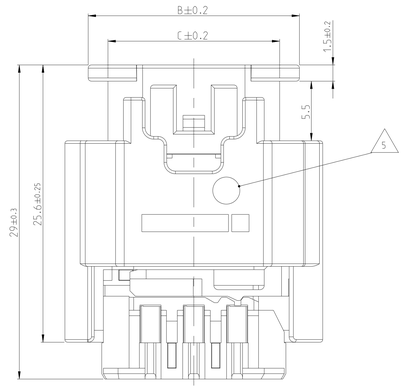

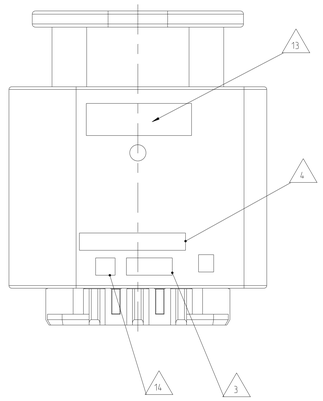

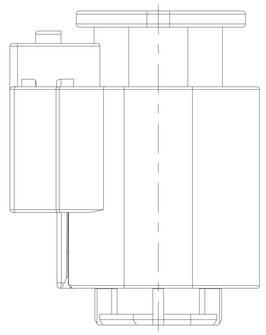

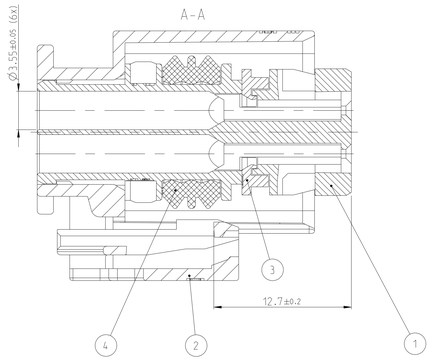

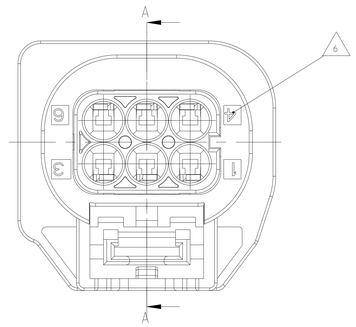

ASSEMBLY
WIRE TO WIRE CONNECTOR
Zusammenbau
Fliegende Kupplung
2:1

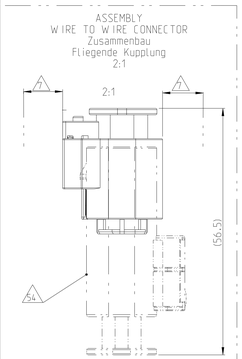

RETAINER (ITEM 3) IN END-LOCK POSITION
Kontaktsicherung (Pos. 3) in Endraststellung

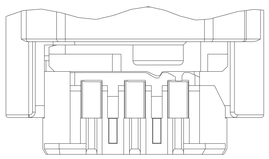

11 RETAINER (ITEM 3) IN PRE-LOCK POSITION
Kontaktsicherung (Pos. 3) in Vorraststellung

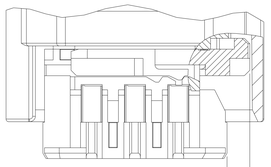

DISPLACEMENT
Verschiebeweg

CUT-OUT OF BODY
Karosserie-Durchbruch
2:1

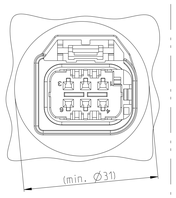

NOTES
Bemerkungen

1 ONLY THE GERMAN LANGUAGE VERSION IS AUTHORITATIVE
Massgebend ist nur der deutsche Text

2 CODING A AS SHOWN
Kodierung A wie gezeichnet

3 SUPPLIER-MARKING
Lieferantenkennzeichnung

4 MATERIAL IDENTIFICATION
Materialkennzeichnung

5 DATE MARKING
Datumskennzeichnung

6 CAVITY IDENTIFICATION
Kammerkennzeichnung

7 SPACE OF ACTIVITY MIN. 15 mm
Betaetigungsfreiraum min.

8 CONTACTS BY TE CONNECTIVITY: SEE 1452674/SINGLE WIRE SEAL VERSION
Kontakte von TE Connectivity: siehe 1452674/Einzeldichtungs-Version
MAX. WIRE SIZE 1.0 mm^2 FLR PERMITTED, DIN 72551-6
MAX. INSULATION DIAMETER 2.1 mm.
max. zulaessiger Leitungsquerschnitt 1.0 mm^2 FLR, DIN 72551-6
max. Aussendurchmesser Isolierung 2.1 mm.

9 REGRIND USAGE IN CLOSED LOOP PROCESSING ALLOWED
Verwendung von Rezyklat im "closed loop"-Verfahren zulaessig

10 ALL EXTERNAL EDGES DESIGNED AS CHAMFER: 0.5x30° OR RADII MIN. 0.1
Alle Aussenkanten als Fasen: 0.5x30° oder als Rundung min. 0.1

11 SUPPLY CONDITION: RETAINER (ITEM 3) IN PRELOCKED POSITION
Auslieferzustand: Kontaktsicherung (Pos. 3) in Vorraststellung

12 SUPPLY CONDITION: CPA (ITEM 5) IN PRELOCKED POSITION
Auslieferzustand: Gehaeusesicherung (Pos. 5) in Vorraststellung

13 TE CONNECTIVITY ORDER-NO.
TE Connectivity Bestell-Nr.

14 MOULD CAVITY MARKING: X.Y
X = MOULD NO.
Y = MOULD CAVITY NO.
Formnestkennzeichnung: X.Y
X = Werkzeug-Nr.
Y = Formnest-Nr.

NOTE Bem.	FEATURE Merkmal	TE Connectivity - No.
50	CONTACTS BY TE CONNECTIVITY 8 Kontakte von TE Connectivity	1452674 SINGLE WIRE SEAL VERSION Einzeldichtungsversion
51	PRODUCT-SPEC. Produkt-Spez.	108-94453
52	APPLICATION-SPEC. Verarbeitungs-Spez.	114-94327
53	ACCORDING TO INTERFACE BY TE CONNECTIVITY Passend zu AV von TE Connectivity	114-94328
54	MATING TO CONNECTOR BY TE CONNECTIVITY Passend zu Gehaeuse von TE Connectivity	2294976

3D VIEW 2:1	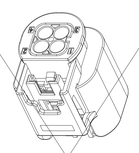	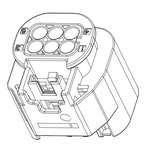	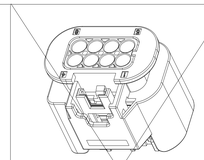	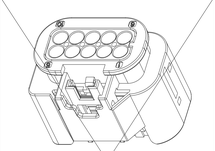	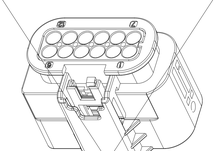
NUMBER OF POSITION	4 POS	6 POS	8 POS	10 POS	12 POS
PART NUMBER	1-2323043-1	1-2312022-1	1-2323048-1	1-2323049-1	1-2323051-1
PART REVISION	A	B	A	A	A
DIM "A"	19.8	23.8	27.8	31.8	35.8
DIM "B"	15.5	19.5	27.5	27.5	31.5
DIM "C"	11.85	15.85	19.85	23.85	27.85

A	1-2312022-1	B	Dichtung SEAL	1	MVQ	-	grün/GREEN aehnl./SIM. RAL 6017	4
			Kontaktsicherung RETAINER	1	PBT-GF20	max. 25%	violett/VIOLET aehnl./SIM. RAL 4006	3
			Umgehaeuse COVER HOUSING	1	PBT-GF30	max. 25%	schwarz/BLACK aehnl./SIM. RAL 9005	2
			Buchsengehaeuse INNER HOUSING	1	PBT-GF30	max. 25%	schwarz/BLACK aehnl./SIM. RAL 9005	1
COD	TE Connectivity Bestell-Nr. ORDER-NO.	REV	Benennung TITLE	QTY	Werkstoff MATERIAL	Rezyklatanteil REGRIND 9	Oberflaeche/Farbe SURFACE/COLOUR	Pos. ITEM

THIS DRAWING IS A CONTROLLED DOCUMENT.
TOLERANCES UNLESS OTHERWISE SPECIFIED ACC. TO DIN 16742
CENTRIC TO NOMINAL DIMENSION.

DIMENSIONS: mm
TOLERANCES UNLESS OTHERWISE SPECIFIED
0 PLC ±
1 PLC ±
2 PLC ±
3 PLC ±
4 PLC ±
ANGLES ±1°
MATERIAL - -
FINISH - -

DWN 08NOV2016 C. L'Abbate
CHK 14DEC2017 B. Puchner
APVD -
PRODUCT SPEC 51
APPLICATION SPEC 52
WEIGHT 7.5g

TE Connectivity

NAME 6POS. MCON1.2. CONNECTOR SEALED
6pol. MCON1.2. Gehaeuse wasserdicht

SIZE A0 | CASE CODE 00779 | DRAWING NO C-2312022 | RESTRICTED TO

CUSTOMER DRAWING | SCALE 5:1 | SHEET 1 OF 1 | REV B

4806 (3/13)