THIS DRAWING IS UNPUBLISHED. RELEASED FOR PUBLICATION 20
© COPYRIGHT 20 BY - ALL RIGHTS RESERVED.

REVISIONS					
P	LTR	DESCRIPTION	DATE	DWN	APVD
	A6	ECN-24-285252	19SEP24	C.J	J.Z
	A7	ECN-24-295761	28NOV24	C.J	J.Z
	A8	ECN-25-311374	14MAR25	T.J	J.Z
	A9	ECN-25-317949	22APR25	C.J	J.Z

10 WAY CODING A-D 2311788-5 AS SHOWN:

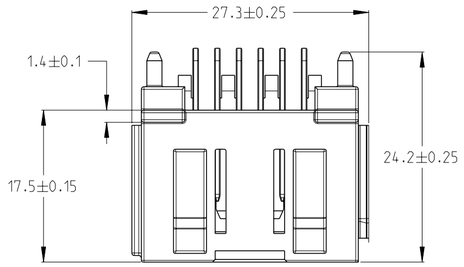

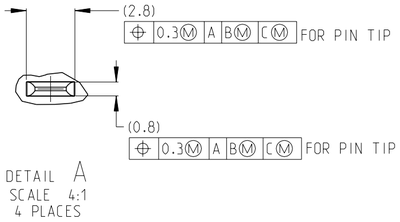

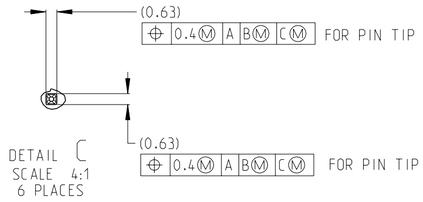

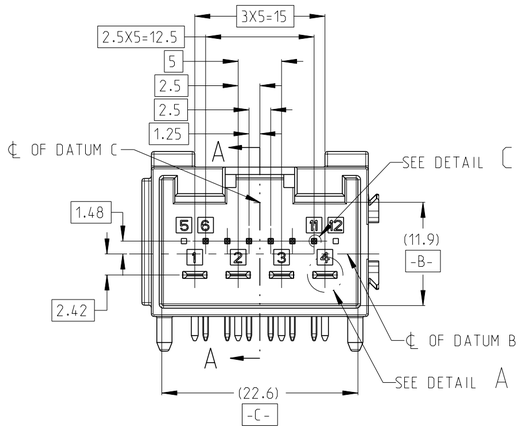

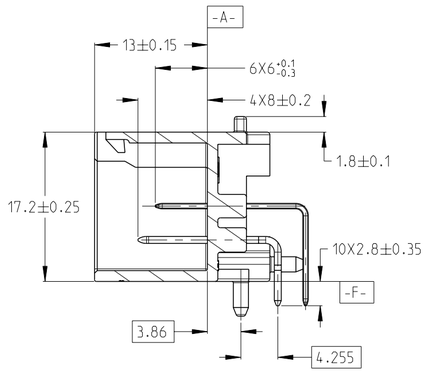

SECTION A-A

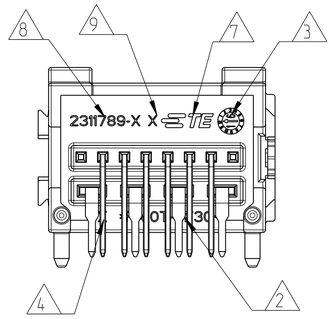

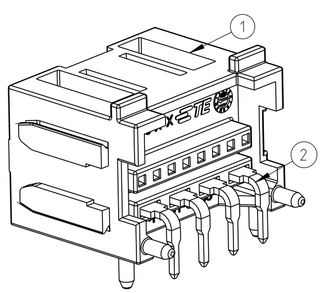

4 WAY AS SHOWN

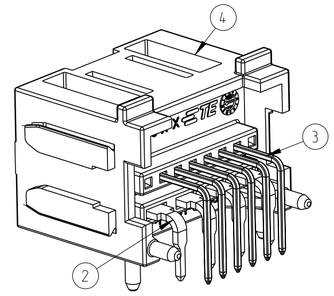

10 WAY HYBRID AS SHOWN

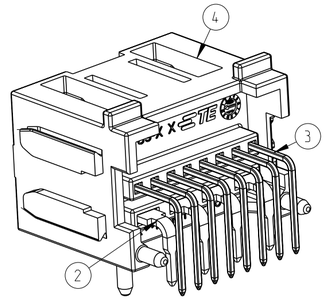

12 WAY HYBRID AS SHOWN

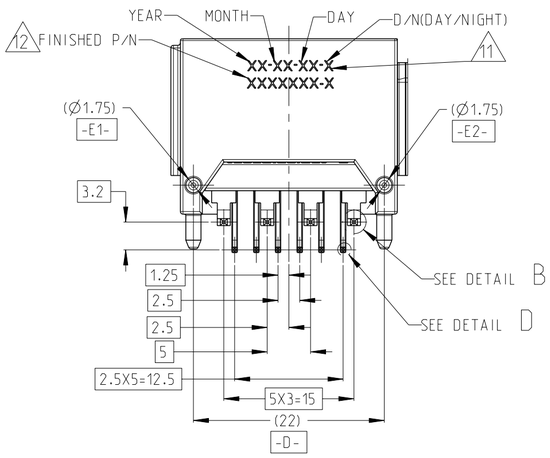

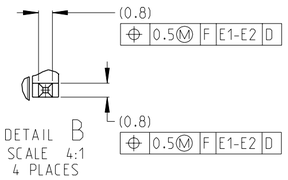

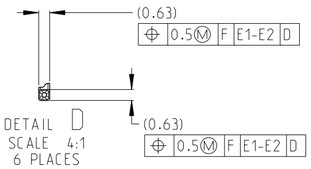

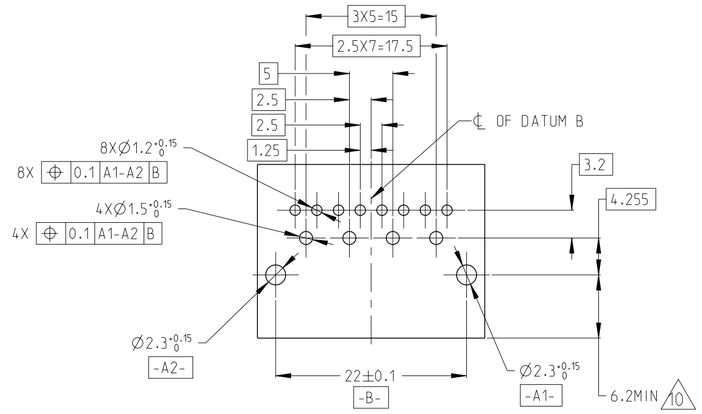

RECOMMENDED PCB LAY-OUT
THICKNESS 1.6±0.14mm

1. PLASTIC MATERIAL: PA10T OR SPS
   TAB PIN MATERIAL: CuZn30
   SQ PIN MATERIAL: CuZn30
   PLATING SPEC: TIN OVER NICKEL
2. MATERIAL MARKING
3. PLASTIC HOUSING PRODUCTION MONTH CLOCK
4. TOOL CAVITY MARKING 1.2.3.4...
5. PRODUCT OPERATION TEMPERTURE RANGE:-40°C~105°C
6. SUITABLE MATING CONNECTOR: 2322347
7. TE-LOGO
8. TE SEMIFINISHED PART NUMBER
9. TE SEMIFINISHED HOUSING PART REVISION
10. PRODUCT STABILIZATION FOR SOLDERING PROCESS
11. PRODUCT ASSEMBLY DATA INFORMATION
12. THE FINISHED P/N: X-2311788-X
13. FOR 12P P/N 1-2311788-*
    THE PLUG TO HEADER MATING/UN-MATING FORCE DEVIATION TO 85N
14. UNDEFINED DIMENSIONS ACCRODING TO TE INTERFACE DRAWING 114-101068

THIS DRAWING IS A CONTROLLED DOCUMENT.

DIMENSIONS: mm

TOLERANCES UNLESS OTHERWISE SPECIFIED:
0 PLC ±
1 PLC ±0.1
2 PLC ±0.01
3 PLC ±0.001
4 PLC ±0.0001
ANGLES ±

MATERIAL 1

FINISH -

DWN	K.WEI	18JUN2017
CHK	E.JIANG	08AUG2017
APVD	L.YIN	09AUG2017
PRODUCT SPEC	108-101599	
APPLICATION SPEC	114-101065	
WEIGHT	-	

TE Connectivity

NAME: 4 WAY POWER/10 WAY/12 WAY HYBRID HEADER -

SIZE	CAGE CODE	DRAWING NO	RESTRICTED TO
A2	00779	C-2311788	-

CUSTOMER DRAWING | SCALE 2:1 | SHEET 1 OF 2 | REV A9

1471-9 (3/13)

THIS DRAWING IS UNPUBLISHED. RELEASED FOR PUBLICATION 20
© COPYRIGHT 20 BY - ALL RIGHTS RESERVED.

REVISIONS

P	LTR	DESCRIPTION	DATE	DWN	APVD

DIFFERENT CODINGS

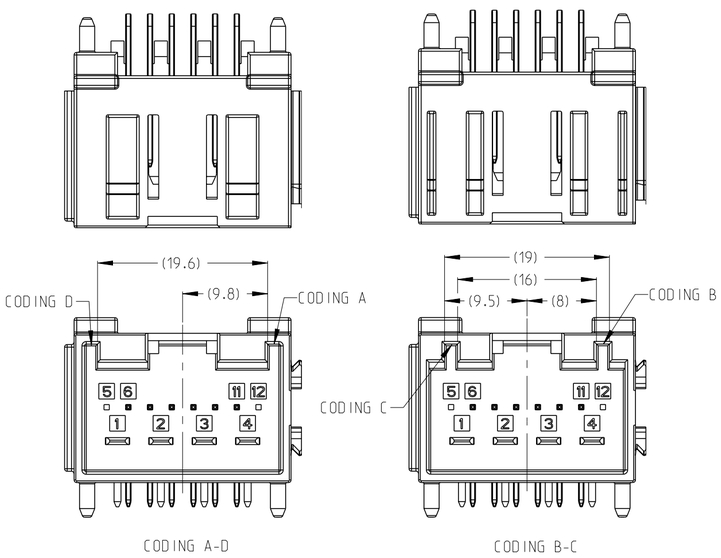

VO MARK FOR PN: 2-2311788-1 / 2-2311788-2

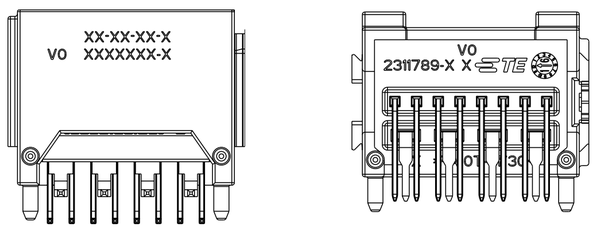

5-2311788-3	12 WAY HYBRID HEADER	X	F	F	X	X	X	X	X	X	X	X	DIM:310*210*28.85mm	8	0.63 SQ PIN	CuZn30	Sn OVER Ni	3
		A-D				X		X		X		X		4	0.8X2.8 TAB PIN	CuZn30	Sn OVER Ni	2
														1	12 WAY HOUSING	PA10T OR SPS	BLACK	4
5-2311788-2		F	X	X	F	X	X	X	X	X	X	X	DIM:320*210*29mm	8	0.63 SQ PIN	CuZn30	Sn OVER Ni	3
		B-C				X		X		X		X		4	0.8X2.8 TAB PIN	CuZn30	Sn OVER Ni	2
														1	12 WAY HOUSING	PA10T OR SPS	BROWN	4
5-2311788-1		X	F	F	X	X	X	X	X	X	X	X	DIM:320*210*29mm	8	0.63 SQ PIN	CuZn30	Sn OVER Ni	3
		A-D				X		X		X		X		4	0.8X2.8 TAB PIN	CuZn30	Sn OVER Ni	2
														1	12 WAY HOUSING	PA10T OR SPS	BLACK	4
4-2311788-2		F	X	X	F	X	X	X	X	X	X	X	DIM:320*210*29mm	8	0.63 SQ PIN	CuZn30	Sn OVER Ni	3
		B-C				X		X		X		X		4	0.8X2.8 TAB PIN	CuZn30	Sn OVER Ni	2
														1	12 WAY HOUSING	PA10T OR SPS	BROWN	4
4-2311788-1		X	F	F	X	X	X	X	X	X	X	X	DIM:320*210*29mm	8	0.63 SQ PIN	CuZn30	Sn OVER Ni	3
		A-D				X		X		X		X		4	0.8X2.8 TAB PIN	CuZn30	Sn OVER Ni	2
														1	12 WAY HOUSING	PA10T OR SPS	BLACK	4
2-2311788-2		F	X	X	F	X	X	X	X	X	X	X	DIM:375*275*31mm	8	0.63 SQ PIN	CuZn30	Sn OVER Ni	3
		B-C				X		X		X		X		4	0.8X2.8 TAB PIN	CuZn30	Sn OVER Ni	2
														1	12 WAY HOUSING	PA10T V0	BROWN	4
2-2311788-1		X	F	F	X	X	X	X	X	X	X	X	DIM:375*275*31mm	8	0.63 SQ PIN	CuZn30	Sn OVER Ni	3
		A-D				X		X		X		X		4	0.8X2.8 TAB PIN	CuZn30	Sn OVER Ni	2
														1	12 WAY HOUSING	PA10T V0	BLACK	4
1-2311788-8		X	F	F	X	X	X	X	X	X	X	X	REEL DIM:56*24mm	8	0.63 SQ PIN	CuZn30	Sn OVER Ni	3
		A-D				X		X		X		X		4	0.8X2.8 TAB PIN	CuZn30	Sn OVER Ni	2
														1	12 WAY HOUSING	PA10T OR SPS	BLACK	4
1-2311788-7		F	X	F	X	X	X	X	X	X	X	X	REEL DIM:56*24mm	8	0.63 SQ PIN	CuZn30	Sn OVER Ni	3
		B-D				X		X		X		X		4	0.8X2.8 TAB PIN	CuZn30	Sn OVER Ni	2
														1	12 WAY HOUSING	PA10T OR SPS	BLUE	4
1-2311788-6		X	F	X	F	X	X	X	X	X	X	X	REEL DIM:56*24mm	8	0.63 SQ PIN	CuZn30	Sn OVER Ni	3
		A-C				X		X		X		X		4	0.8X2.8 TAB PIN	CuZn30	Sn OVER Ni	2
														1	12 WAY HOUSING	PA10T OR SPS	GREEN	4
1-2311788-5		F	X	X	F	X	X	X	X	X	X	X	REEL DIM:56*24mm	8	0.63 SQ PIN	CuZn30	Sn OVER Ni	3
		B-C				X		X		X		X		4	0.8X2.8 TAB PIN	CuZn30	Sn OVER Ni	2
														1	12 WAY HOUSING	PA10T OR SPS	BROWN	4
1-2311788-4		F	X	F	X	X	X	X	X	X	X	X	DIM:375*275*31mm	8	0.63 SQ PIN	CuZn30	Sn OVER Ni	3
		B-D				X		X		X		X		4	0.8X2.8 TAB PIN	CuZn30	Sn OVER Ni	2
														1	12 WAY HOUSING	PA10T OR SPS	BLUE	4
1-2311788-3		X	F	X	F	X	X	X	X	X	X	X	DIM:375*275*31mm	8	0.63 SQ PIN	CuZn30	Sn OVER Ni	3
		A-C				X		X		X		X		4	0.8X2.8 TAB PIN	CuZn30	Sn OVER Ni	2
														1	12 WAY HOUSING	PA10T OR SPS	GREEN	4
1-2311788-2		F	X	X	F	X	X	X	X	X	X	X	DIM:375*275*31mm	8	0.63 SQ PIN	CuZn30	Sn OVER Ni	3
		B-C				X		X		X		X		4	0.8X2.8 TAB PIN	CuZn30	Sn OVER Ni	2
														1	12 WAY HOUSING	PA10T OR SPS	BROWN	4
1-2311788-1		X	F	F	X	X	X	X	X	X	X	X	DIM:375*275*31mm	8	0.63 SQ PIN	CuZn30	Sn OVER Ni	3
		A-D				X		X		X		X		4	0.8X2.8 TAB PIN	CuZn30	Sn OVER Ni	2
														1	12 WAY HOUSING	PA10T OR SPS	BLACK	4
2311788-8	10 WAY HYBRID HEADER	F	X	F	X	-	X	X	X	X	X	-	DIM:375*275*31mm	6	0.63 SQ PIN	CuZn30	Sn OVER Ni	3
		B-D				X		X		X		X		4	0.8X2.8 TAB PIN	CuZn30	Sn OVER Ni	2
														1	12 WAY HOUSING	PA10T OR SPS	BLUE	4
2311788-7		X	F	X	F	-	X	X	X	X	X	-	DIM:375*275*31mm	6	0.63 SQ PIN	CuZn30	Sn OVER Ni	3
		A-C				X		X		X		X		4	0.8X2.8 TAB PIN	CuZn30	Sn OVER Ni	2
														1	12 WAY HOUSING	PA10T OR SPS	GREEN	4
2311788-6		F	X	X	F	-	X	X	X	X	X	-	DIM:375*275*31mm	6	0.63 SQ PIN	CuZn30	Sn OVER Ni	3
		B-C				X		X		X		X		4	0.8X2.8 TAB PIN	CuZn30	Sn OVER Ni	2
														1	12 WAY HOUSING	PA10T OR SPS	BROWN	4
2311788-5		X	F	F	X	-	X	X	X	X	X	-	DIM:375*275*31mm	6	0.63 SQ PIN	CuZn30	Sn OVER Ni	3
		A-D				X		X		X		X		4	0.8X2.8 TAB PIN	CuZn30	Sn OVER Ni	2
														1	12 WAY HOUSING	PA10T OR SPS	BLACK	4
2311788-4	4 WAY POWER HEADER	F	X	F	X	-	-	-	-	-	-	-	DIM:375*275*31mm	4	0.8X2.8 TAB PIN	CuZn30	Sn OVER Ni	2
		B-D				X		X		X		X		1	4 WAY HOUSING	PA10T OR SPS	BLUE	1
2311788-3		X	F	X	F	-	-	-	-	-	-	-	DIM:375*275*31mm	4	0.8X2.8 TAB PIN	CuZn30	Sn OVER Ni	2
		A-C				X		X		X		X		1	4 WAY HOUSING	PA10T OR SPS	GREEN	1
2311788-2		F	X	X	F	-	-	-	-	-	-	-	DIM:375*275*31mm	4	0.8X2.8 TAB PIN	CuZn30	Sn OVER Ni	2
		B-C				X		X		X		X		1	4 WAY HOUSING	PA10T OR SPS	BROWN	1
2311788-1		X	F	F	X	-	-	-	-	-	-	-	DIM:375*275*31mm	4	0.8X2.8 TAB PIN	CuZn30	Sn OVER Ni	2
		A-D				X		X		X		X		1	4 WAY HOUSING	PA10T OR SPS	BLACK	1
12 TE P/N	DESCRIPTION	A	B	C	D	5	6	7	8	9	10	11	12					
						1		2		3		4		TRAY	QTY	PART DESCRIPTION	MATERIAL	COLOR/FINISH	ITEM NO
		CODING				PIN LOCATION									PART LIST				

"X"...EXISTING "F"...FILLED "-"...DO NOT EXISTING

A9

THIS DRAWING IS A CONTROLLED DOCUMENT.

DIMENSIONS: mm

TOLERANCES UNLESS OTHERWISE SPECIFIED:
0 PLC ±
1 PLC ±0.1
2 PLC ±0.01
3 PLC ±0.004
4 PLC ±0.0001
ANGLES ±

MATERIAL - -

FINISH - -

DWN K.WEI 18JUN2017
CHK F.JIANG 08AUG2017
APVD L.YIN 09AUG2017

PRODUCT SPEC -
APPLICATION SPEC -
WEIGHT -

TE Connectivity

NAME 4 WAY POWER/10 WAY/12 WAY HYBRID HEADER -

SIZE	CAGE CODE	DRAWING NO	RESTRICTED TO
A2	00779	C-2311788	-

CUSTOMER DRAWING SCALE 2:1 SHEET 2 OF 2 REV A9

1471-9 (3/13)