THIS DRAWING IS UNPUBLISHED. RELEASED FOR PUBLICATION -
© COPYRIGHT copyright_dgte- ALL RIGHTS RESERVED.

REVISIONS					
P	LTR	DESCRIPTION	DATE	DWN	APVD
	A	INITIAL RELEASE	08JUN16	F.P	P.W
	A1	ECR-18-004841	04MAY18	F.P	W.W
	A2	ECR-19-019964	24DEC19	B.Z	W.W
	A3	ECN-23-221302	11JUL23	M.X	F.P

CODINGS

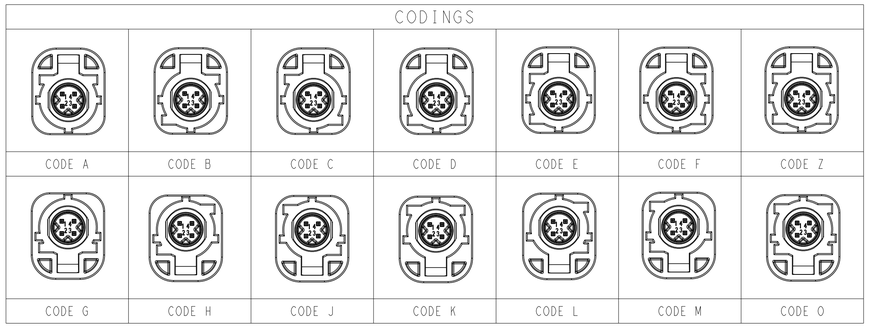

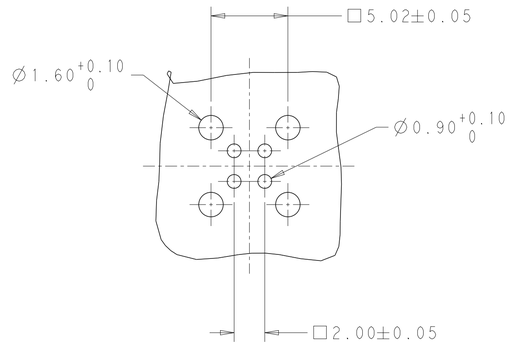

RECOMMENDED PCB LAYOUT

NOTES

1 DETAILS OF DESIGN ARE LEFT TO TE CONNECTIVITY

2 HSD INTERFACE ACC. TO TE SPEC. 114-18950

3 PACKAGING: TAPE AND REEL

4 MARKING OF 100% TEST PASSED

5 FITS WITH HSD CONNECTOR 90 DEG. TE PN X-2208145-X
AND HSD CONTACT 90 DEG. TE PN 2236774-1...-3 OR
HSD CONNECTOR 180 DEG TE PN X-1823898-X
AND HSD CONTACT 180 DEG. TE PN 2236772-1

6 ALL DIMENSIONS IN BRACKETS () FOR INFORMATION ONLY

7 AREA OF VACUUM PICKUP

WEIGHT [g]: 3

AS SHOWN CODING Z

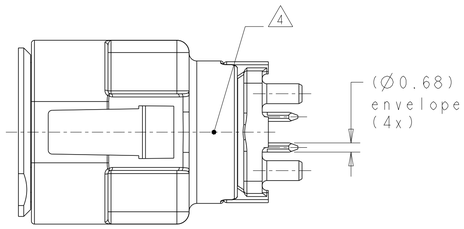

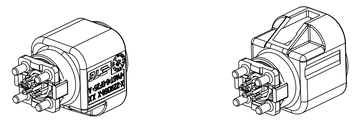

SCALE 2:1

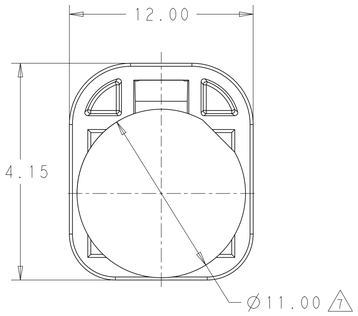

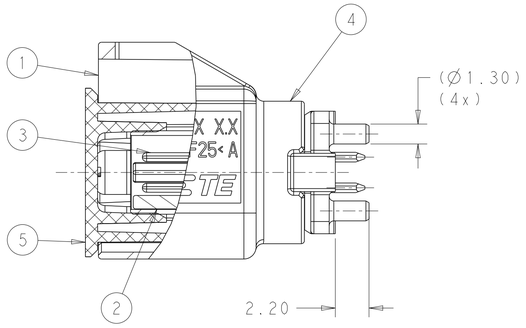

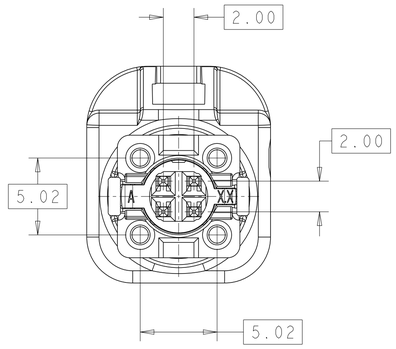

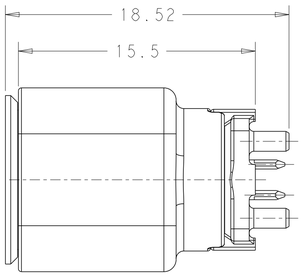

QUANTITY															CODE	DESCRIPTION	MATERIAL	FINISH COLOR, SIMILAR RAL	ITEM NO.
1																PICK-UP CAP	NYLON	BLACK	5
1																SHIELDING BODY	Zn ALLOY	INTERFACE SIDE: TIN PLATING 3µm MIN. SOLDER SIDE: TIN PLATING 3µm MIN	4
4																CONTACT PIN	CuSn4	SOLDER SIDE: TIN PLATING 3µm MIN. INTERFACE SIDE: GOLD PLATING 0.8µm MIN.	3
1																CAVITY BLOCK	PA4T	BLACK	2
														1	O	CODING COVER	PA6T/6 -GF25	LIGHT GREEN / 6027	1
													1		M			PASTEL ORANGE / 2003	
												1			L			YELLOW GREEN / 6048	
											1				K			CURRY / 1027	
										1					J			BEIGE / 1001	
									1						H			HEATHER VIOLET / 4003	
								1							G			BLUISH GREY / 7031	
							1								Z			WATER BULE / 5021	
						1									F			NUT BROWN / 8011	
					1										E			LEAF GREEN / 6002	
				1											D			CLARET VIOLET / 4004	
			1												C			SIGNAL BLUE / 5005	
		1													B			CREAM WHITE / 9001	
1															A			JET BLACK / 9005	
0-1	0-2	0-3	0-4	0-5	0-6	0-9	1-1	1-2	1-3	1-4	1-5	1-6	1-9		ASSY NO. X-2304935-Y				
A	B	C	D	E	F	Z	G	H	J	K	L	M	O		ASSY CODE				
A	A	A	A	A	A	A	A	A	A	A	A	A	A		REVISION				

THIS DRAWING IS A CONTROLLED DOCUMENT.

DIMENSIONS: mm

TOLERANCES UNLESS OTHERWISE SPECIFIED:
0 PLC ±-
1 PLC ±0.5
2 PLC ±0.5
3 PLC ±-
4 PLC ±-
ANGLES ±-

MATERIAL - -
FINISH - -

DWN ML.XU 11JUL2023
CHK D.ZHU 11JUL2023
APVD F.PAN 11JUL2023
PRODUCT SPEC 108-101388
APPLICATION SPEC 114-32195
WEIGHT -

TE Connectivity

NAME HSD HEADER 180DEG 4POS. ASSY. WITH PICKUP CAP

SIZE	CAGE CODE	DRAWING NO	RESTRICTED TO
A1	-	C-2304935	-

CUSTOMER DRAWING SCALE 5:1 SHEET 1 OF 1 REV A3

4805 (3/13)