THIS DRAWING IS UNPUBLISHED. RELEASED FOR PUBLICATION 20016
© COPYRIGHT 20016 BY - TE ALL RIGHTS RESERVED.

REVISIONS					
P	LTR	DESCRIPTION	DATE	DWN	APVD
	A3	ECR-16-010670	28-Jun-16	J.Z	S.W
	A4	ADD NEW 9/3-2289228-2	25-Jul-26	J.Z	I.Y
	A5	ECR-19-004608	01DEC 17	S.C	I.Y
	A6	ECR-22-157025	31OCT 22	S.X	J.Z

(1) ASSY
1/3-2209545-X

COLOUR: BLACK

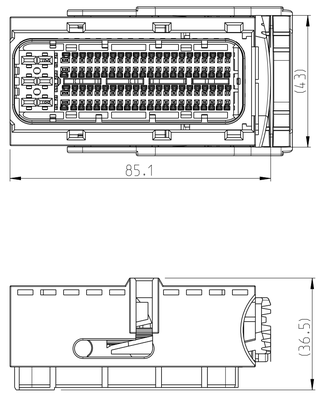

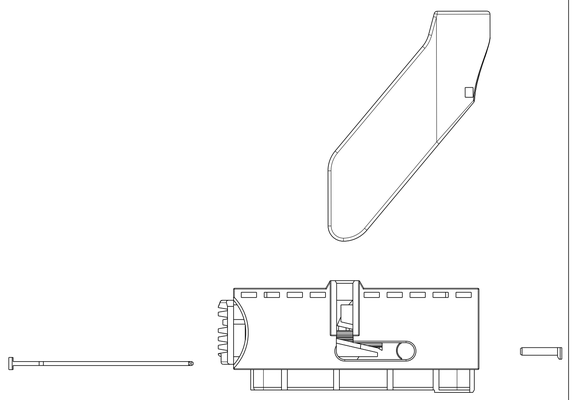

X-2289228-1/5

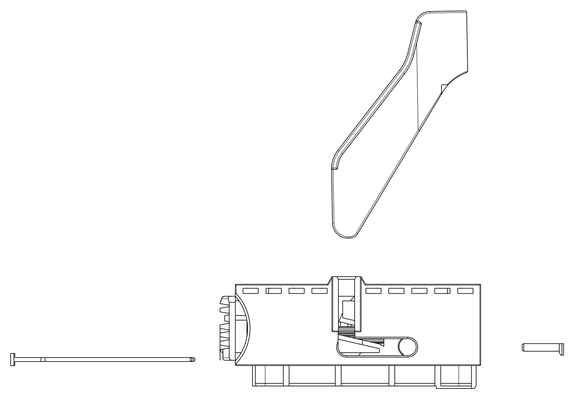

X-2289228-2/6

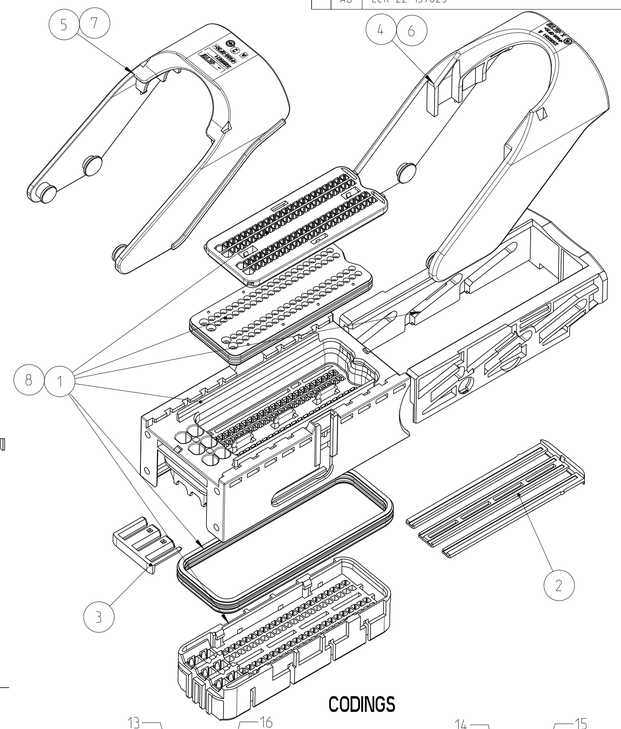

CODINGS

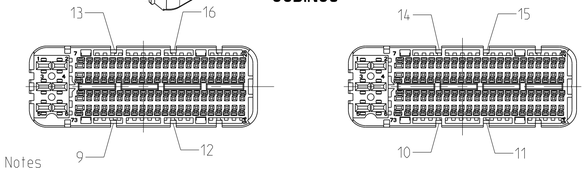

(2) RETAINER
FOR CONTACTS MQS AND 1.5CB
6-1355134-1 OR 0-2437063-1 (A6)

MATERIAL: PBT-GF30
COLOUR: VIOLET

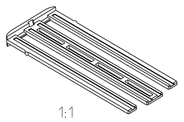

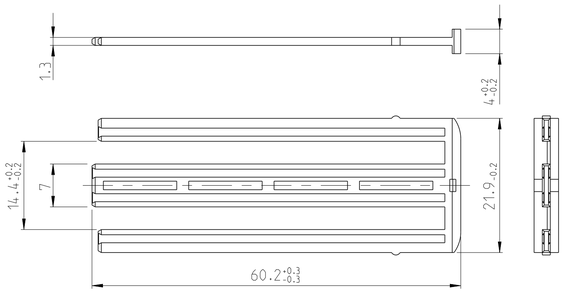

(3) RETAINER
FOR CONTACT MCP2.8
(A6) 6-1355135-1 OR 0-2437064-1

MATERIAL: PBT-GF30
COLOUR: VIOLET

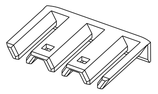

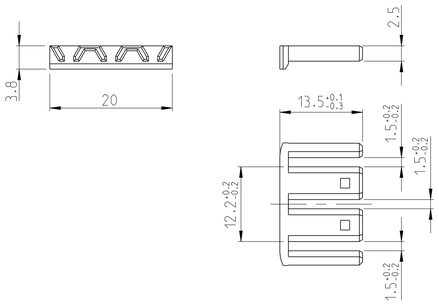

(4) LEVER FOR RECEPTACLE HOUSING
2305001-1 MATERIAL: PA66-GF30
2305001-6 MATERIAL: PA6-GF30

COLOUR: BLACK

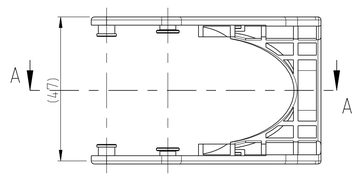

A-A

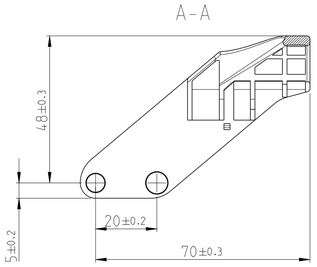

(5) LEVER FOR RECEPTACLE HOUSING
2289587-1 MATERIAL: PA66-GF30
2289587-6 MATERIAL: PA6-GF30

COLOUR: BLACK

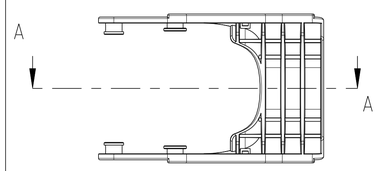

A-A

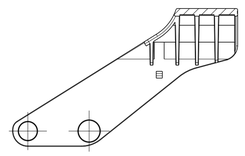

Notes

1 MATING PART EXECUTION ACC. TO 114-18304-001

2 SUITABLE CONTACTS: MQS: 1534116, 1703282; 1.5mm CB: 1241608
MCP2.8K : 1241392, 1241394, 1241396
SEALING PLUGS 1394871 (0.63), 1394872 (1.5)

3 FORM CONDITIONED DELAY OF 0.8 ADMISSIBLE

4 PARTS ARE PACKING IN MAIN BOX , BUT ITEM 1, 2, 3 ARE SEPARATELLY.
RETAINERS AND LEVER SHOULD BE ASSEMBLED IN HARNESS MARKER

(5) ITEM "X" MEANS THE VARIANT CODE, THE RELEASED CODE SEE TABLE

6 *-2289228-1 SUITABLE COVER P/N: 2137754-1, 2300724-1

7 *-2289228-2 SUITABLE COVER P/N: 7-2289579-1/6

1	1							2289587-6	LEVER	7
		1	1					2305001-6	LEVER	6
				1	1			2289587-1	LEVER	5
						1	1	2305001-1	LEVER	4
1	1	1	1	1	1	1	1	(A6) 6-1355135-1/ 0-2437064-1	RETAINER, 6P	3
1	1	1	1	1	1	1	1	(A6) 6-1355134-1/ 0-2437063-1	RETAINER, 88P	2
				1		1		1-2209545-9	CARRIER HSG.	8
					1		1	1-2209545-1	CARRIER HSG.	1
1		1						3-2209545-9	CARRIER HSG.	8
	1		1					3-2209545-1	CARRIER HSG.	1
QTY.				QTY.				PART-NO.	DESCRIPTION	ITEM
(5)				(5)				CODING		
9-2289228-6	3-2289228-6	9-2289228-5	3-2289228-5	9-2289228-2	3-2289228-2	9-2289228-1	3-2289228-1	TE-REF.-NO.		
A	A	A	A	A	A	A	A	REV		

9-2289228-1/2/5/6	WATER BLUE	X	X	X	X	X	X	X	X
3-2289228-1/2/5/6	BLUE		X	X		X			X
7-2289228-1	WATER		X	X			X	X	
ASSY (5) RART No.	CAVITY BLOCK COLOR	9	10	11	12	13	14	15	16
		CODING							

TOLERANCES UNLESS OTHERWISE SPECIFIED ACC. TO DIN 16901-1400 CENTRIC TO NOMINAL DIMENSION. EDITION 1982-11 SHALL APPLY.
Freimasstoleranzen nach DIN 16901-1400. Es gilt die Ausgabe 1982-11.

THIS DRAWING IS A CONTROLLED DOCUMENT.
DIMENSIONING AND TOLERANCING PER GPS (ISO STANDARDS)

DIMENSIONS: mm

TOLERANCES UNLESS OTHERWISE SPECIFIED
0 PLC ±
1 PLC ±
2 PLC ±
3 PLC ±
4 PLC ±
ANGLES ±2°

MATERIAL: SEE NOTES
FINISH: -

DWN	J.ZONG	29MAR2018
CHK	W.WU	29MAR2018
APVD	I.YIN	29MAR2018
PRODUCT SPEC	-	
APPLICATION SPEC	-	
WEIGHT	-	

TE Connectivity

NAME: CONNECTOR HOUISNG, 94POSN
-
MQS +1.5 Clear Body + MCP 2.8K

SIZE	CAGE CODE	DRAWING NO	RESTRICTED TO
A1	-	C-2289228	-

CUSTOMER DRAWING | SCALE 1:1 | SHEET 1 OF 1 | REV A6

4805 (3/13)