THIS DRAWING IS UNPUBLISHED. RELEASED FOR PUBLICATION 2014
© COPYRIGHT 2014 Tyco Electronics AMP GmbH ALL RIGHTS RESERVED.

REVISIONS

P	LTR	DESCRIPTION	DATE	DWN	APVD
	A	NEW DRAWING	28NOV2014	SBL	JWO
	B	Section A-A updated	24NOV2015	CLA	RP
	C	CPA (Item 5) changed Views added. Note 14 and 54 added	17JUN2016	CLA	RP
	C1	TE-ORDER-NO.: 1-2287960-1 changed to 1-2287960-5; Note 13 expanded	17AUG2017	KSC	RPU
	C2	TE-ORDER-NO. moved. Note 13 changed.	23JUL2018	CLA	RPU
	D	Cover (Item 2): material changed. was PA66-GF30 CPA (Item 5): material and colour changed	26JAN2021	CLA	RPU

CODINGS
Kodierungen
2:1

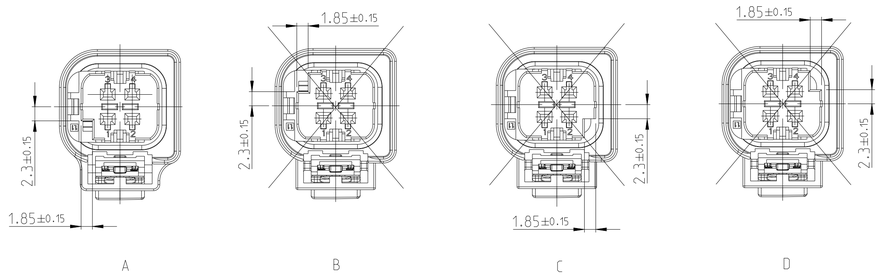

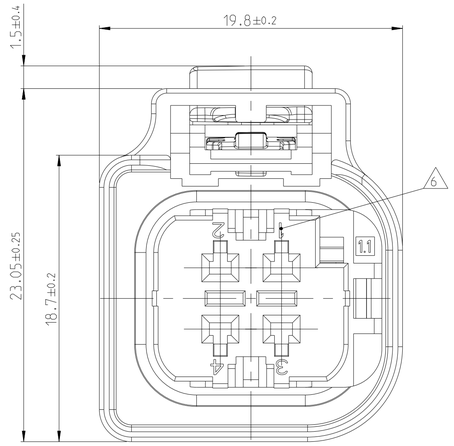

ASSEMBLY
WIRE TO WIRE CONNECTOR
Zusammenbau
Fliegende Kupplung
2:1

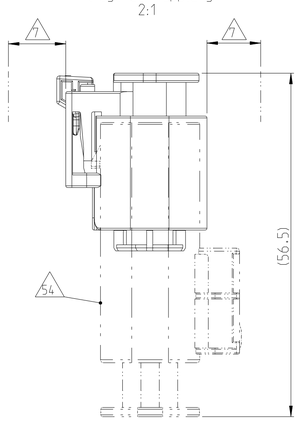

CUT-OUT OF BODY
Karosserie-Durchbruch
2:1

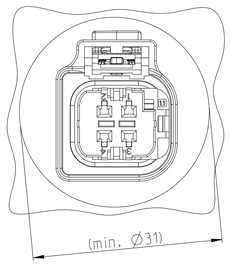

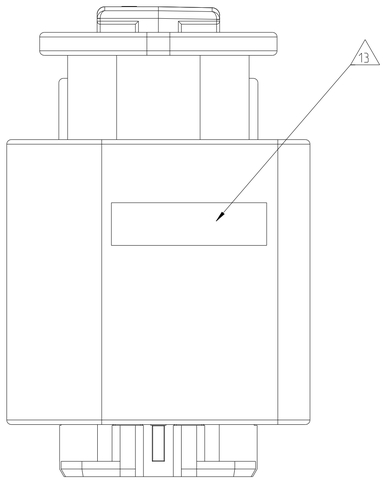

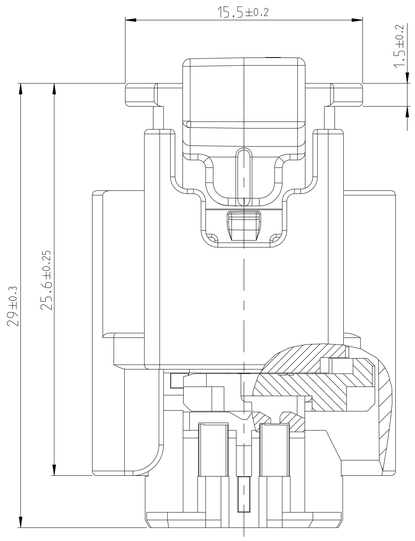

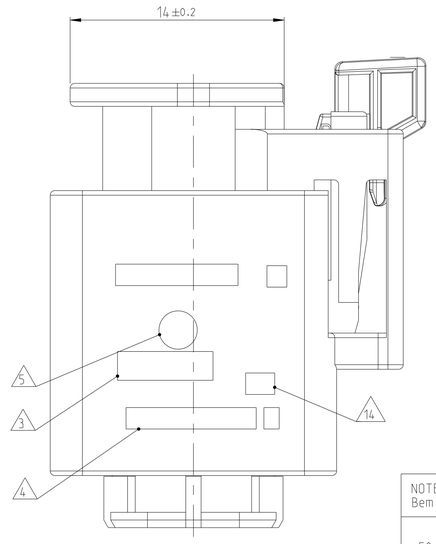

RETAINER (ITEM 3) IN END-LOCK POSITION
Kontaktsicherung (Pos. 3) in Endraststellung

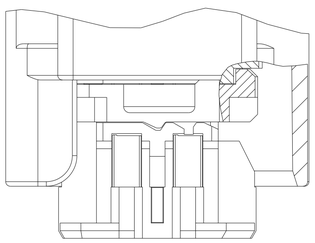

11 RETAINER (ITEM 3) IN PRE-LOCK POSITION
Kontaktsicherung (Pos. 3) in Vorraststellung

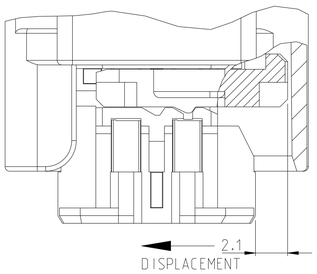

A-A

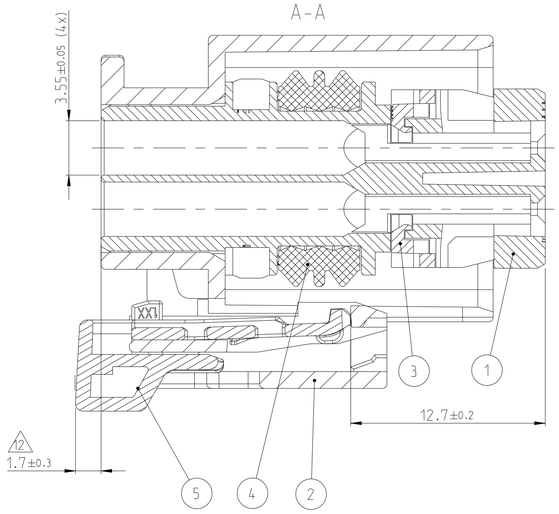

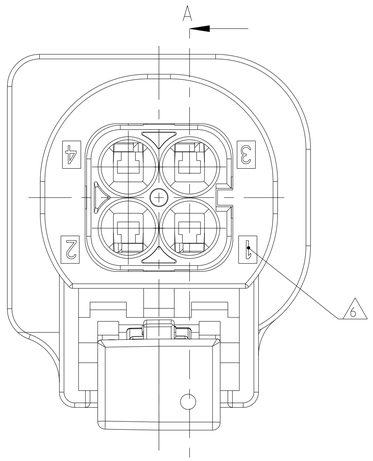

3D-VIEW
3D-Ansicht
1:1

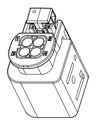

NOTES
Bemerkungen

1 ONLY THE GERMAN LANGUAGE VERSION IS AUTHORITATIVE
Massgebend ist nur der deutsche Text

2 CODING A AS SHOWN
Kodierung A wie gezeichnet

3 SUPPLIER-MARKING
Lieferantenkennzeichnung

4 MATERIAL IDENTIFICATION
Materialkennzeichnung

5 DATE MARKING
Datumskennzeichnung

6 CAVITY IDENTIFICATION
Kammerkennzeichnung

7 SPACE OF ACTIVITY MIN. 15 mm
Betaetigungsfreiraum min.

8 CONTACTS BY TE CONNECTIVITY: SEE 1452674/SINGLE WIRE SEAL VERSION
Kontakte von TE Connectivity: siehe 1452674/Einzeldichtungs-Version
MAX. WIRE SIZE 1.0 mm^2 FLR PERMITTED, DIN 72551-6
MAX. INSULATION DIAMETER 2.1 mm.
max. zulaessiger Leitungsquerschnitt 1.0 mm^2 FLR. DIN 72551-6
max. Aussendurchmesser Isolierung 2.1 mm.

9 REGRIND USAGE IN CLOSED LOOP PROCESSING ALLOWED
Verwendung von Rezyklat im "closed loop"-Verfahren zulaessig

10 ALL EXTERNAL EDGES DESIGNED AS CHAMFER: 0.5x30° OR RADII MIN. 0.1
Alle Aussenkanten als Fasen: 0.5x30° oder als Rundung min. 0.1

11 SUPPLY CONDITION: RETAINER (ITEM 3) IN PRELOCKED POSITION
Auslieferzustand: Kontaktsicherung (Pos. 3) in Vorraststellung

12 SUPPLY CONDITION: CPA (ITEM 5) IN PRELOCKED POSITION
Auslieferzustand: Gehaeusesicherung (Pos. 5) in Vorraststellung

13 TE CONNECTIVITY ORDER-NO.
TE Connectivity Bestell-Nr.

14 MOULD CAVITY MARKING: X.Y
X = MOULD NO.
Y = MOULD CAVITY NO.
Formnestkennzeichnung: X.Y
X = Werkzeug-Nr.
Y = Formnest-Nr.

NOTE Bem.	FEATURE Merkmal	TE Connectivity - No.
50	CONTACTS BY TE CONNECTIVITY 8 Kontakte von TE Connectivity	1452674 SINGLE WIRE SEAL VERSION Einzeldichtungsversion
51	PRODUCT-SPEC. Produkt-Spez.	108-94453
52	APPLICATION-SPEC. Verarbeitungs-Spez.	114-94327
53	ACCORDING TO INTERFACE BY TE CONNECTIVITY Passend zu AV von TE Connectivity	114-94328
54	MATING TO CONNECTOR BY TE CONNECTIVITY Passend zu Gehaeuse von TE Connectivity	2301519

COD	TE Connectivity Bestell-Nr. ORDER-NO. 13	REV	Benennung TITLE	QTY	Werkstoff MATERIAL	Rezyklatanteil REGRIND ±3% 9	Oberflaeche/Farbe SURFACE/COLOUR	Pos. ITEM
A	1-2287960-5	D	Gehaeusesicherung CPA	1	PBT-GF33	25%	rot/RED aehnl./SIM. RAL 3000	5
			Dichtung SEAL	1	MVQ	-	gruen/GREEN aehnl./SIM. RAL 6017	4
			Kontaktsicherung RETAINER	1	PBT-GF20	25%	violett/VIOLET aehnl./SIM. RAL 4006	3
			Umgehaeuse COVER HOUSING	1	PBT-GF30	25%	schwarz/BLACK aehnl./SIM. RAL 9005	2
			Buchsengehaese INNER HOUSING	1	PBT-GF30	25%	schwarz/BLACK aehnl./SIM. RAL 9005	1

THIS DRAWING IS A CONTROLLED DOCUMENT.
TOLERANCES UNLESS OTHERWISE SPECIFIED ACC. TO DIN 16742
CENTRIC TO NOMINAL DIMENSION.

DIMENSIONS: mm
TOLERANCES UNLESS OTHERWISE SPECIFIED:
0 PLC ±
1 PLC ±
2 PLC ±
3 PLC ±
4 PLC ±
ANGLES ±1°
MATERIAL -
FINISH -

DWN S. Blidar 02OCT2014
CHK C. L'Abbate 02OCT2014
APVD J. Woller -
PRODUCT SPEC - 51
APPLICATION SPEC - 52
WEIGHT 6.3 g

TE Connectivity

NAME 4POS. MCON1.2, CONNECTOR SEALED
4pol. MCON1.2, Gehaeuse wasserdicht
-

SIZE A1 | CAGE CODE 00779 | DRAWING NO C-2287960 | RESTRICTED TO -

Customer Drawing | SCALE 5:1 | SHEET 1 OF 1 | REV D