THIS DRAWING IS UNPUBLISHED. RELEASED FOR PUBLICATION 2015
© COPYRIGHT 2015 Tyco Electronics AMP GmbH ALL RIGHTS RESERVED.

REVISIONS

| P | LTR | DESCRIPTION | DATE | DWN | APVD |
|---|---|---|---|---|---|
| | B2 | TABLE ADAPTED | 24SEP2019 | HO. | AOe |
| | B3 | REMOVE LOCATION CODE | 10DEC2020 | HERT | AOE |
| | B4 | TABLE UPDATED AND NOTE ADDED | 30MAY2023 | MCG | SPEG |
| | B5 | NEW VARIANT ADDED IN TABLE | 07AUG2024 | FRAN | MGC |

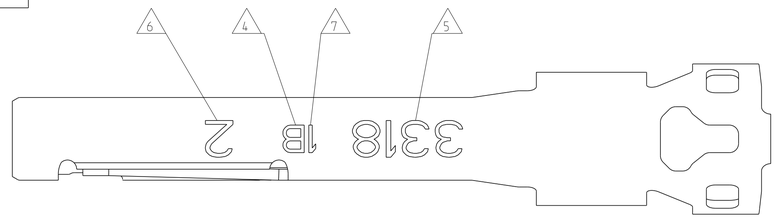


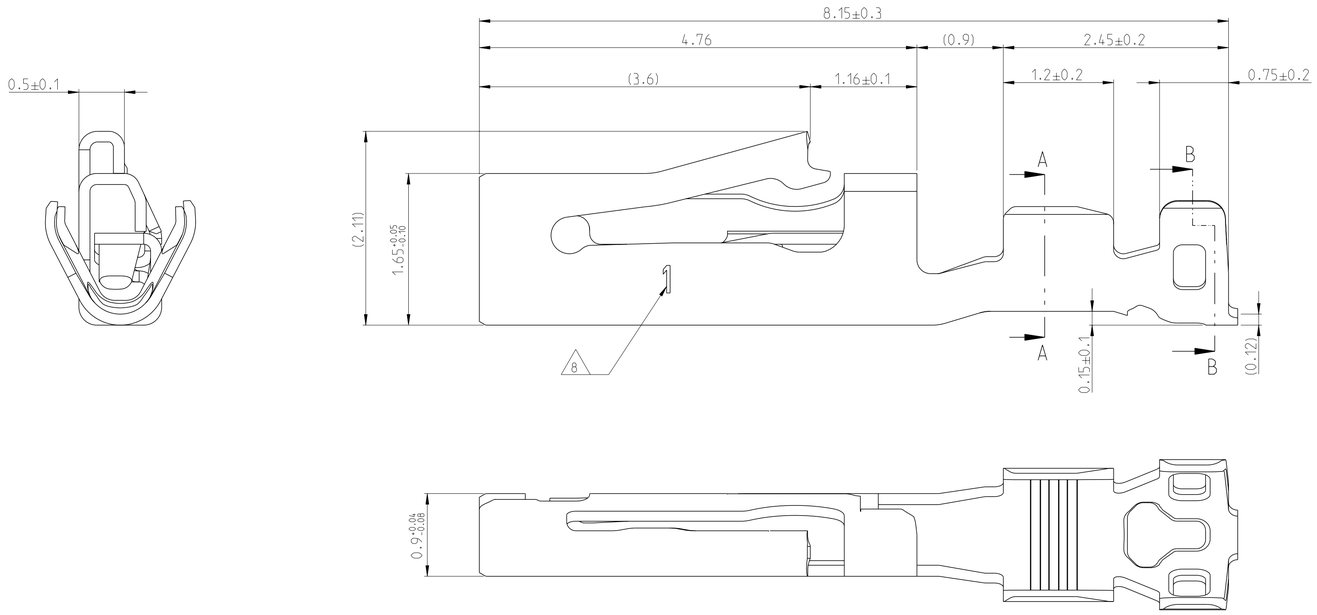


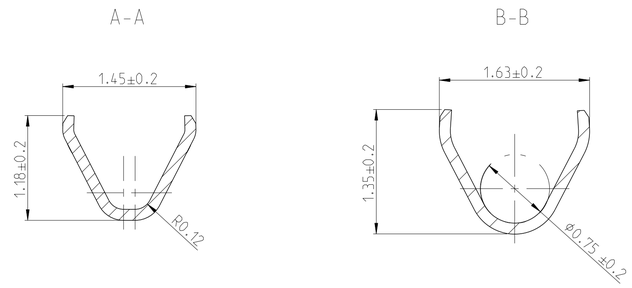


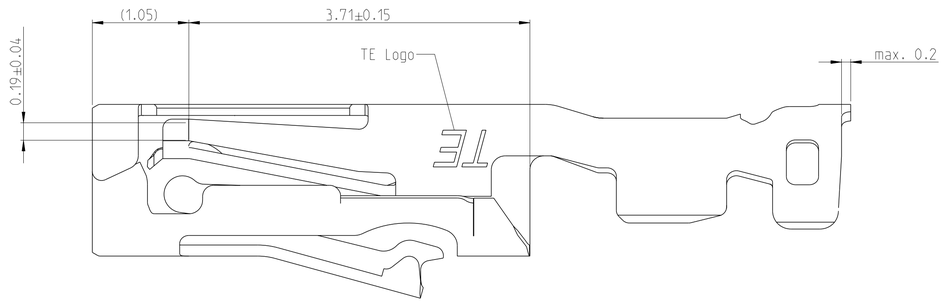


NOTES
Bemerkungen

1 IN CASE OF DISCREPANCIES THE GERMAN TEXT IS VALID
Im Zweifelsfall ist der deutsche Text bindend

2 DETAILS OF DESIGN ARE LEFT TO THE MANUFACTURER
Einzelheiten der Ausfuehrung bleiben dem Hersteller ueberlassen

3 SUITABLE TO CONTACT-PIN: TE 114-94419
Passend zu Kontaktstift: TE 114-94419

4 TE-REVISION
TE-Revision

5 DATE-CODE (WEEK/YEAR)
Datumscode (Woche/Jahr)

6 MARKING: SEE TABLE
Markierung: siehe Tabelle

7 DIE IDENDIFICATION NUMBER
Werkzeugkennzeichnung

8 TRACK ALLOCATION IN TWO TRACK DIES
Spurzuordnung in Zweispurwerkzeug

20:1

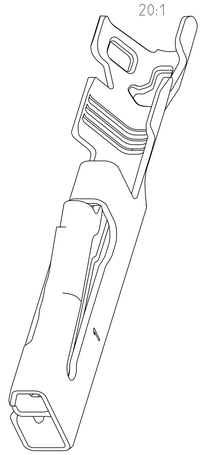

| | PN | REV. | Markierung MARKING 6 | MATERIAL | Beschichtung Kontaktpunkt SURFACE CONTACT POINT | INSUL.DIA ISOø [mm] | WIRE-SIZE DGB [mm²] | Gewicht WEIGHT [g] |
|---|---|---|---|---|---|---|---|---|
| B5 | 2-2287720-3 | B | 2H | CuNi3SiMg | Ag | 0.95-1.05 | 0.13-0.22 | 0.027 |
| | 2-2287720-1 | B | 2 | CuNi3SiMg | PRE TIN (0.8-3 µm) | 0.95-1.05 | 0.13-0.22 | 0.027 |

THIS DRAWING IS A CONTROLLED DOCUMENT.
DIMENSIONING AND TOLERANCING PER GPS (ISO STANDARDS).

DIMENSIONS: mm

TOLERANCES UNLESS OTHERWISE SPECIFIED:
0 PLC ±0.4
1 PLC ±0.1
2 PLC ±0.01
3 PLC ±0.005
4 PLC ±
ANGLES ±1
±0.15

MATERIAL SEE TABLE -
FINISH SEE TABLE -

DWN 12DEC2016 A. Oettle
CHK 12DEC2016 S. Raab
APVD - M. Burghard
PRODUCT SPEC 108-94545
APPLICATION SPEC 114-94424
WEIGHT SEE TABLE

TE Connectivity

NAME PicoMQS CONTACT
Buchsenkontakt
SOCKET CONTACT

SIZE A1 | CAGE CODE 00779 | DRAWING NO C-2287720 | RESTRICTED TO -

CUSTOMER DRAWING | SCALE 30:1 | SHEET 1 OF 1 | REV B5

TOLERANCING ISO 8015
TOLERIERUNG ISO 8015

DIESE ZEICHNUNG IST EIN KONTROLLIERTES DOKUMENT.
BEMASSUNGEN UND TOLERANZEN GEMAESS GPS (ISO STANDARDS).

printed on 7 Aug 2024 10:01 (Mitteleuropäische Zeit) from TE2204442