© 2022 TE Connectivity. All Rights Reserved.

# CODINGS
## SHOWN WITHOUT LEVER - 1:1

THE DRAWING SHOWS THE 2-DIMENSIONAL REFERENCE COMPONENT CONDITION OF THE ASSEMBLY TO IDENTIFY AND SPECIFY THE NECESSARY DIMENSIONS ONLY. THE DELIVERED PARTS MAY DEVIATE FROM THE DRAWING REGARDING THE ORIENTATION AND POSITION OF EACH COMPONENT (e.g. SLACK CABLE). SO FAR THE FUNCTIONALITY IS NOT CONCERNED.

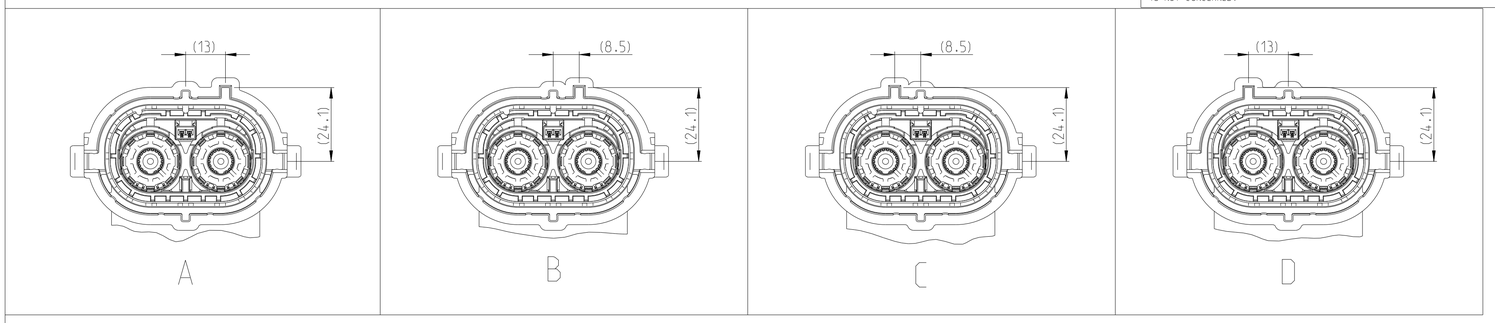


| REVISIONS | | | | | |
|---|---|---|---|---|---|
| P | LTR | DESCRIPTION | DATE | DWN | APVD |
| | B4 | VARIANTS ADDED. NOTES AND LABEL UPDATED | 11OCT2018 | JM | JJ |
| | B5 | NEW VARIANTS ADDED | 08NOV2018 | JM | JJ |
| | B6 | OBSOLETE PNs | 18OCT2022 | OS | JK |
| | B7 | SUPERSEEDED PNs | 04JUL2023 | OS | JK |

## NOTES

1 PACKAGING:
EACH HOUSING OF THE CABLE ASSEMBLY TO BE INDIVIDUALLY WRAPPED IN FOAM (PN 741639-2) AND FIXED WITH RUBBER BAND (PN 1-2000064-0).
PACKED IN STANDARD SHIPPING BOX VERTICAL SIDES OVERLAID WITH PAPER CUSHIONS (PN 740045-2) ACCORDING TE SPEC. 107-18087, 107-18064.
DAMAGED TO BE AVOIDED.

△2 ELECTRICAL TEST ACCORDING TE SPECIFICATION 108-18857.
USE CURRENT REVISION ALWAYS.
MIN. 10 mm STRIPPING OF OUTER JACKET AND BRAID FOR ELECTRICAL TEST PURPOSE.

3 PRODUCT SPECIFICATION: 108-94268, 108-94256
APPLICATION SPECIFICATION: 114-94052, 114-94083

△4 MANUFACTURING CODE:
TE PART NO., CURRENT REV. LEVEL AND DATE CODE (DD.MM.YY).
TO BE PRINTED ON LABEL (ITEM 10).
LABEL TO BE APPLIED TO THE CABLE AFTER SUCCESSFUL ELECTRICAL TEST.

△5 LEVER POSITION: CLOSED ON DELIVERY.

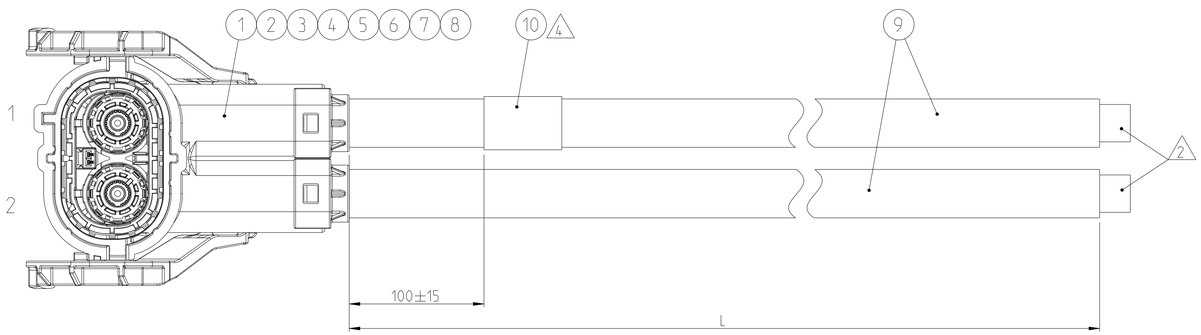


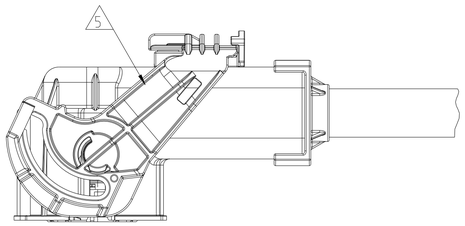


△4 **LABEL LEGEND:**

TE
TE PN: X-2286946-Y Rev. __ — CURRENT REV.
DD/MM/YY — DATE CODE
2.7 kV DC TEST PASSED

| SUPERSEEDED BY | TE PART NO. | REV. | LENGTH L [mm] | TOL. [mm] | CODING |
|---|---|---|---|---|---|
| OBSOLETE | ~~1-2286946-0~~ | ~~B~~ | ~~500~~ | ~~+30~~ | A |
| - | 1-2286946-1 | B | 1000 | +30 | |
| OBSOLETE | ~~1-2286946-2~~ | ~~B~~ | ~~2000~~ | ~~+35~~ | |
| - | 1-2286946-3 | B | 3000 | +40 | |
| OBSOLETE | ~~1-2286946-4~~ | ~~B~~ | ~~4000~~ | ~~+50~~ | |
| - | 1-2286946-5 | B | 5000 | +60 | |
| - | 1-2286946-6 | A | 7000 | +65 | |
| OBSOLETE | ~~2-2286946-0~~ | ~~B~~ | ~~500~~ | ~~+30~~ | B |
| - | 2-2286946-1 | B | 1000 | +30 | |
| OBSOLETE | ~~2-2286946-2~~ | ~~B~~ | ~~2000~~ | ~~+35~~ | |
| - | 2-2286946-3 | B | 3000 | +40 | |
| OBSOLETE | ~~2-2286946-4~~ | ~~B~~ | ~~4000~~ | ~~+50~~ | |
| - | 2-2286946-5 | B | 5000 | +60 | |
| - | 2-2286946-6 | A | 7000 | +65 | |
| B7 3-2286946-3 | ~~3-2286946-0~~ | ~~A~~ | ~~500~~ | ~~+30~~ | C |
| | ~~3-2286946-1~~ | ~~A~~ | ~~1000~~ | ~~+30~~ | |
| | ~~3-2286946-2~~ | ~~A~~ | ~~2000~~ | ~~+35~~ | |
| - | 3-2286946-3 | A | 3000 | +40 | |
| B7 3-2286946-5 | ~~3-2286946-4~~ | ~~A~~ | ~~4000~~ | ~~+50~~ | |
| - | 3-2286946-5 | A | 5000 | +60 | |
| B7 4-2286946-3 | ~~4-2286946-0~~ | ~~A~~ | ~~500~~ | ~~+30~~ | D |
| | ~~4-2286946-1~~ | ~~A~~ | ~~1000~~ | ~~+30~~ | |
| | ~~4-2286946-2~~ | ~~A~~ | ~~2000~~ | ~~+35~~ | |
| - | 4-2286946-3 | A | 3000 | +40 | |
| B7 4-2286946-5 | ~~4-2286946-4~~ | ~~A~~ | ~~4000~~ | ~~+50~~ | |
| - | 4-2286946-5 | A | 5000 | +60 | |

| QTY 4- -X | QTY 3- -X | QTY 2- -X | QTY 1- -X | DESCRIPTION | ITEM NO. |
|---|---|---|---|---|---|
| 1 | 1 | 1 | 1 | LABEL. HELL. TYP 323. 25.4 x 95.25 | 10 |
| see table | see table | see table | see table | 1 POS. POWER CABLE. 35 SQMM | 9 |
| 2 | 2 | 2 | 2 | PROTEC. COVER 8 MM HV. 90 DEG. 35 SQMM | 8 |
| 2 | 2 | 2 | 2 | SINGLE WIRE SEAL. 8 MM HV. 90 DEG. 35 SQMM | 7 |
| 2 | 2 | 2 | 2 | SHIELD CRIMP FERRULE. 90 DEG | 6 |
| 2 | 2 | 2 | 2 | SHIELDING SLEEVE. 90 DEG | 5 |
| 2 | 2 | 2 | 2 | FINGER PROTECTION CAP 8 MM HV. 90 DEG | 4 |
| 2 | 2 | 2 | 2 | HV 8 MM. DEEP DRAWN SOCKET PIN. 90 DEG.. ASSEMBLY | 3 |
| 2 | 2 | 2 | 2 | HV 8 MM. DEEP DRAWN SOCKET PIN. 90 DEG.. ASSEMBLY | 2 |
| 1 | - | - | - | 2 POS. 8 MM HV. REC HSG. 90 DEG. ASSY. SEALED. COD D | 1 |
| - | 1 | - | - | 2 POS. 8 MM HV. REC HSG. 90 DEG. ASSY. SEALED. COD C | |
| - | - | 1 | - | 2 POS. 8 MM HV. REC HSG. 90 DEG. ASSY. SEALED. COD B | |
| - | - | - | 1 | 2 POS. 8 MM HV. REC HSG. 90 DEG. ASSY. SEALED. COD A | |

TOLERANCING EN ISO 8015
TOLERIERUNG EN ISO 8015

DIESE ZEICHNUNG IST EIN KONTROLLIERTES DOKUMENT.
BEMASSUNGEN UND TOLERANZEN GEMAESS GPS (ISO STANDARDS).
THIS DRAWING IS A CONTROLLED DOCUMENT.
DIMENSIONING AND TOLERANCING PER GPS (ISO STANDARDS).

DIMENSIONS: mm
TOLERANCES UNLESS OTHERWISE SPECIFIED:
0 PLC ±
1 PLC ±
2 PLC ±
3 PLC ±
4 PLC ±
ANGLES ±
MATERIAL -
FINISH -

DWN O. Snajder 06MAR2015
CHK J. Janecka 06MAR2015
APVD R. Hort 06MAR2015
PRODUCT SPEC see note 3
APPLICATION SPEC see note 3
WEIGHT -

TE Connectivity

NAME 2 POS. HVP800. 90. 35 SQMM. CABLE ASSY

SIZE A1 | CAGE CODE - | DRAWING NO C-2286946 | RESTRICTED TO -

CUSTOMER DRAWING | SCALE 1:1 | SHEET 1 OF 1 | REV. B7

4805 (3/13)