© 2022 TE Connectivity. All Rights Reserved.

CODINGS SHOWN WITHOUT LEVER - 1:1

THE DRAWING SHOWS THE 2-DIMENSIONAL REFERENCE COMPONENT CONDITION OF THE ASSEMBLY TO IDENTIFY AND SPECIFY THE NECESSARY DIMENSIONS ONLY. THE DELIVERED PARTS MAY DEVIATE FROM THE DRAWING REGARDING THE ORIENTATION AND POSITION OF EACH COMPONENT (e.g. SLACK CABLE). SO FAR THE FUNCTIONALITY IS NOT CONCERNED.

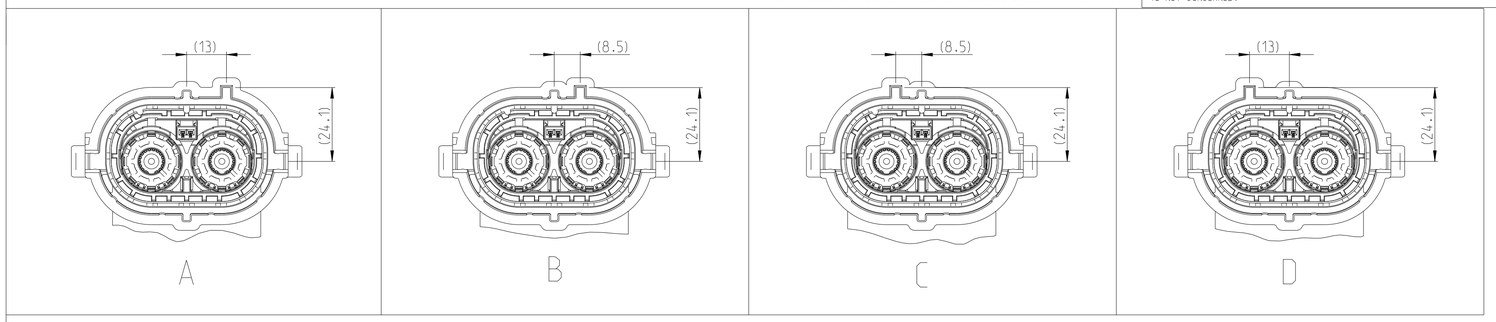

REVISIONS					
P	LTR	DESCRIPTION	DATE	DWN	APVD
	B5	NOTES AND LABEL LEGEND UPDATED	11OCT2018	JM	JJ
	B6	NEW VARIANTS ADDED	08NOV2018	JM	JJ
	B7	OBSOLETE PNs	17OCT2022	OS	JK
	B8	SUPERSEEDED PNs	30JUN2023	OS	JK

NOTES

1 PACKAGING:
EACH HOUSING OF THE CABLE ASSEMBLY TO BE INDIVIDUALLY WRAPPED IN FOAM (PN 741639-2) AND FIXED WITH RUBBER BAND (PN 1-2000064-0).
PACKED IN STANDARD SHIPPING BOX VERTICAL SIDES OVERLAID WITH PAPER CUSHIONS (PN 740045-2) ACCORDING TE SPEC. 107-18087, 107-18064.
DAMAGED TO BE AVOIDED.

△2 ELECTRICAL TEST ACCORDING TE SPECIFICATION 108-18857.
USE CURRENT REVISION ALWAYS.
MIN. 10 mm STRIPPING OF OUTER JACKET AND BRAID FOR ELECTRICAL TEST PURPOSE.

3 PRODUCT SPECIFICATION: 108-94268, 108-94256
APPLICATION SPECIFICATION: 114-94052, 114-94083

△4 MANUFACTURING CODE:
TE PART NO., CURRENT REV. LEVEL AND DATE CODE (DD.MM.YY).
TO BE PRINTED ON LABEL (ITEM 10).
LABEL TO BE APPLIED TO THE CABLE AFTER SUCCESSFUL ELECTRICAL TEST.

△5 LEVER POSITION: CLOSED ON DELIVERY.

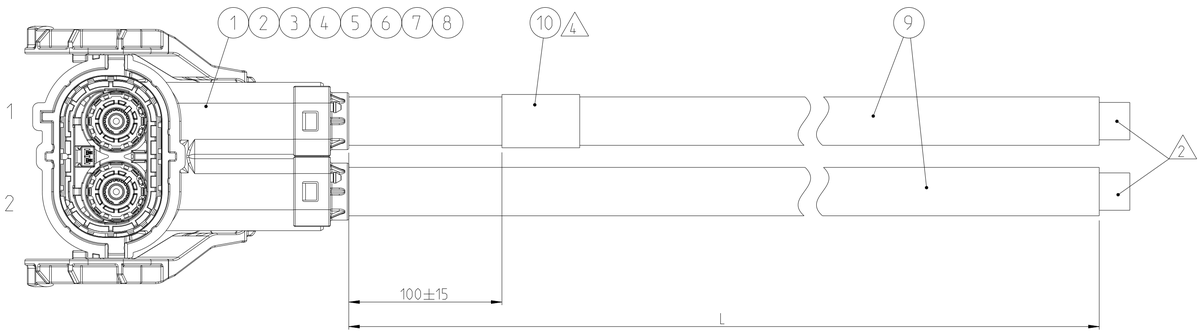

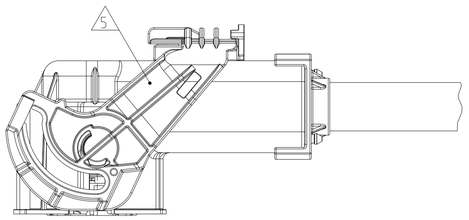

△4 **LABEL LEGEND:**

TE
TE PN: X-2286945-Y Rev. __ — CURRENT REV.
DD/MM/YY — DATE CODE
2.7 kV DC TEST PASSED

SUPERSEEDED BY	TE PART NO.	REV.	LENGTH L [mm]	TOL. [mm]	CODING
OBSOLETE	~~1-2286945-0~~	~~B~~	~~500~~	~~+30~~	A
-	1-2286945-1	B	1000	+30	
OBSOLETE	~~1-2286945-2~~	~~B~~	~~2000~~	~~+35~~	
-	1-2286945-3	B	3000	+40	
OBSOLETE	~~1-2286945-4~~	~~B~~	~~4000~~	~~+50~~	
-	1-2286945-5	B	5000	+60	
-	1-2286945-6	A	10000	+90	
OBSOLETE	~~2-2286945-0~~	~~B~~	~~500~~	~~+30~~	B
-	2-2286945-1	B	1000	+30	
OBSOLETE	~~2-2286945-2~~	~~B~~	~~2000~~	~~+35~~	
-	2-2286945-3	B	3000	+40	
OBSOLETE	~~2-2286945-4~~	~~B~~	~~4000~~	~~+50~~	
-	2-2286945-5	B	5000	+60	
B8 OBSOLETE	~~2-2286945-6~~	~~A~~	~~10000~~	~~+90~~	
-	3-2286945-0	A	500	+30	C
B8 3-2286945-3	~~3-2286945-1~~	~~A~~	~~1000~~	~~+30~~	
	~~3-2286945-2~~	~~A~~	~~2000~~	~~+35~~	
-	3-2286945-3	A	3000	+40	
B8 3-2286945-5	~~3-2286945-4~~	~~A~~	~~4000~~	~~+50~~	
-	3-2286945-5	A	5000	+60	
-	4-2286945-0	A	500	+30	D
B8 4-2286945-3	~~4-2286945-1~~	~~A~~	~~1000~~	~~+30~~	
	~~4-2286945-2~~	~~A~~	~~2000~~	~~+35~~	
-	4-2286945-3	A	3000	+40	
B8 4-2286945-5	~~4-2286945-4~~	~~A~~	~~4000~~	~~+50~~	
-	4-2286945-5	A	5000	+60	

QTY 4- -X	QTY 3- -X	QTY 2- -X	QTY 1- -X	DESCRIPTION	ITEM NO.
1	1	1	1	LABEL. HELL. TYP 323. 25.4 x 95.25	10
see table	see table	see table	see table	1 POS. POWER CABLE. 50 SQMM	9
2	2	2	2	PROTEC. COVER 8 MM HV. 90 DEG. 50 SQMM	8
2	2	2	2	SINGLE WIRE SEAL. 8 MM HV. 90 DEG. 50 SQMM	7
2	2	2	2	SHIELD CRIMP FERRULE. 90 DEG	6
2	2	2	2	SHIELDING SLEEVE. 90 DEG	5
2	2	2	2	FINGER PROTECTION CAP 8 MM HV. 90 DEG	4
2	2	2	2	HV 8 MM. DEEP DRAWN SOCKET PIN. 90 DEG.. ASSEMBLY	3
2	2	2	2	HV 8 MM. DEEP DRAWN SOCKET PIN. 90 DEG.. ASSEMBLY	2
1	-	-	-	2 POS. 8 MM HV. REC HSG. 90 DEG. ASSY. SEALED. COD D	1
-	1	-	-	2 POS. 8 MM HV. REC HSG. 90 DEG. ASSY. SEALED. COD C	
-	-	1	-	2 POS. 8 MM HV. REC HSG. 90 DEG. ASSY. SEALED. COD B	
-	-	-	1	2 POS. 8 MM HV. REC HSG. 90 DEG. ASSY. SEALED. COD A	

DIESE ZEICHNUNG IST EIN KONTROLLIERTES DOKUMENT.
BEMASSUNGEN UND TOLERANZEN GEMAESS GPS (ISO STANDARDS).
THIS DRAWING IS A CONTROLLED DOCUMENT.
DIMENSIONING AND TOLERANCING PER GPS (ISO STANDARDS).

DIMENSIONS: mm

TOLERANCES UNLESS OTHERWISE SPECIFIED:
0 PLC ±
1 PLC ±
2 PLC ±
3 PLC ±
4 PLC ±
ANGLES ±

MATERIAL -
-
FINISH -
-

TOLERANCING EN ISO 8015
TOLERIERUNG EN ISO 8015

DWN O. Snajder 05MAR2015
CHK J. Janecka 05MAR2015
APVD R. Hort 05MAR2015
PRODUCT SPEC see note 3
APPLICATION SPEC see note 3
WEIGHT -

TE Connectivity

NAME 2 POS. HVP800, 90, 50 SQMM, CABLE ASSY
-

SIZE	CAGE CODE	DRAWING NO	RESTRICTED TO
A1	-	C-2286945	-

CUSTOMER DRAWING | SCALE 1:1 | SHEET 1 OF 1 | REV B8

4805 (3/13)