© 2020 TE Connectivity. All Rights Reserved.

THE DRAWING SHOWS THE 2-DIMENSIONAL REFERENCE COMPONENT CONDITION OF THE ASSEMBLY TO IDENTIFY AND SPECIFY THE NECESSARY DIMENSIONS ONLY. THE DELIVERED PARTS MAY DEVIATE FROM THE DRAWING REGARDING THE ORIENTATION AND POSITION OF EACH COMPONENT (e.g. SLACK CABLE). SO FAR THE FUNCTIONALITY IS NOT CONCERNED.

REVISIONS

P	LTR	DESCRIPTION	DATE	DWN	APVD
	E	BOM SUBCOMPONENT CHANGED	28JAN2020	JM	PM
	F	SHIELDING SLEEVE CHANGED	16MAR2021	JM	JF
	F1	OBSOLETE PN	31AUG2022	OS	JK
	G	SUBCOMPONENT CHANGED	25FEB2025	OS	MKV

CODINGS - 1:1

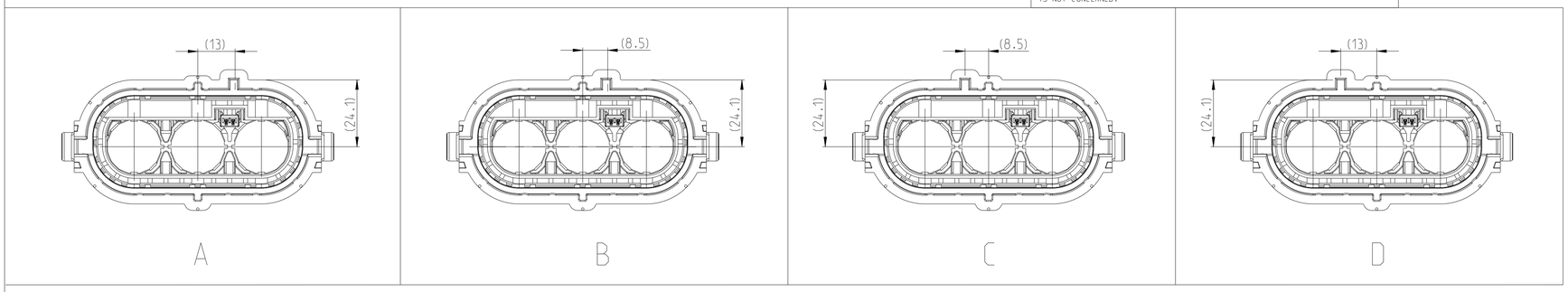

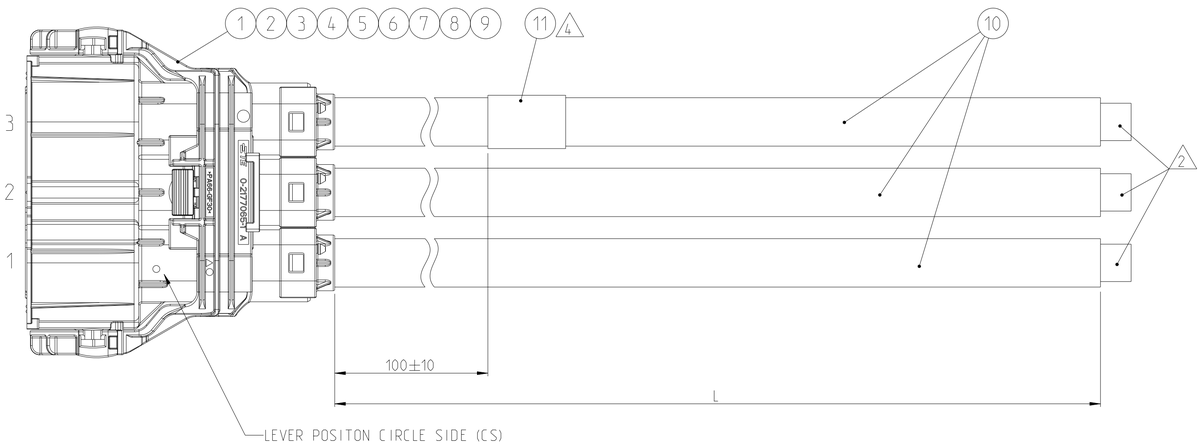

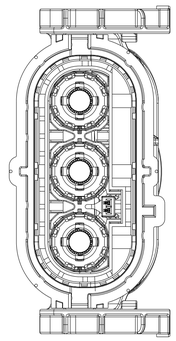

G

	TE PART NO.	REV.	LENGTH L [mm]	TOL. [mm]	CODING	LEVER POSITION
OBSOLETE	~~1-2286917-0~~	~~F~~	~~500~~	~~+30~~	A	CS
-	1-2286917-1	G	1000	+30		
OBSOLETE	~~1-2286917-2~~	~~F~~	~~2000~~	~~+35~~		
-	1-2286917-3	G	3000	+40		
OBSOLETE	~~1-2286917-4~~	~~F~~	~~4000~~	~~+50~~		
-	1-2286917-5	G	5000	+60		
OBSOLETE	~~2-2286917-0~~	~~F~~	~~500~~	~~+30~~	B	CS
-	2-2286917-1	G	1000	+30		
OBSOLETE	~~2-2286917-2~~	~~F~~	~~2000~~	~~+35~~		
-	2-2286917-3	G	3000	+40		
OBSOLETE	~~2-2286917-4~~	~~F~~	~~4000~~	~~+50~~		
-	2-2286917-5	G	5000	+60		
OBSOLETE	~~3-2286917-0~~	~~D~~	~~500~~	~~+30~~	C	CS
OBSOLETE	~~3-2286917-1~~	~~D~~	~~1000~~	~~+30~~		
OBSOLETE	~~3-2286917-2~~	~~D~~	~~2000~~	~~+35~~		
OBSOLETE	~~3-2286917-3~~	~~D~~	~~3000~~	~~+40~~		
OBSOLETE	~~3-2286917-4~~	~~D~~	~~4000~~	~~+50~~		
OBSOLETE	~~3-2286917-5~~	~~D~~	~~5000~~	~~+60~~		
OBSOLETE	~~4-2286917-0~~	~~D~~	~~500~~	~~+30~~	D	CS
OBSOLETE	~~4-2286917-1~~	~~D~~	~~1000~~	~~+30~~		
OBSOLETE	~~4-2286917-2~~	~~D~~	~~2000~~	~~+35~~		
OBSOLETE	~~4-2286917-3~~	~~D~~	~~3000~~	~~+40~~		
OBSOLETE	~~4-2286917-4~~	~~D~~	~~4000~~	~~+50~~		
OBSOLETE	~~4-2286917-5~~	~~D~~	~~5000~~	~~+60~~		

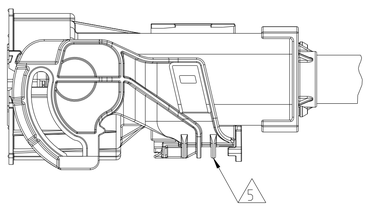

4 LABEL LEGEND:

TE
TE PN: X-2286917-Y Rev. __
DD/MM/YY
2.7 kV DC TEST PASSED

CURRENT REV.

DATE CODE

NOTES

1 PACKAGING:
HOUSING WRAPPED IN FOAM AND FIXED WITH RUBBER BAND.
CABLE ASSEMBLY PROTECTED BY PAPER CUSHIONS INSIDE OF STANDARD BOX ACCORDING TE SPEC. 107-18087, 107-18064.
DAMAGED TO BE AVOIDED.

2 ELECTRICAL TEST ACCORDING TE SPECIFICATION 108-18857.
USE CURRENT REVISION ALWAYS.
MIN. 10 mm STRIPPING OF OUTER JACKET AND BRAID FOR ELECTRICAL TEST PURPOSE.

3 PRODUCT SPECIFICATION: 108-94297, 108-94451
APPLICATION SPECIFICATION: 114-94130, 114-94325

4 MANUFACTURING CODE:
TE PART NO., CURRENT REV. LEVEL AND DATE CODE (DD.MM.YY),
TO BE PRINTED ON LABEL (ITEM 11).
LABEL TO BE APPLIED TO THE CABLE AFTER SUCCESSFUL ELECTRICAL TEST.

5 LEVER POSITION: CLOSED ON DELIVERY

G

QTY 4--x	QTY 3--x	QTY 2--x	QTY 1--x	DESCRIPTION	ITEM NO.
1	1	1	1	LABEL, HELL, TYP 323, 25.4 x 95.25	11
see table	see table	see table	see table	1 POS. POWER CABLE, 50 SQMM	10
3	3	3	3	SHIELDING SLEEVE, 180 DEG	9
3	3	3	3	INSULATION INSERT, 180 DEG	8
3	3	3	3	8 MM HV. CONTACT. ASSY	7
3	3	3	3	PROTEC. COVER 8 MM HV. 90 DEG. 50 SQMM	6
3	3	3	3	SINGLE WIRE SEAL. 8 MM HV. 90 DEG. 50 SQMM	5
3	3	3	3	SHIELDING CRIMP FERRULE. 180 DEG OUTER	4
3	3	3	3	PROTECTION CAP. 180 DEG	3
3	3	3	3	SHIELD CRIMP FERRULE. 180 DEG INNER	2
1	-	-	-	3 POS. 8 MM HV. REC HSG. 180 DEG. ASSY. SEALED. COD D (CS)	1
-	1	-	-	3 POS. 8 MM HV. REC HSG. 180 DEG. ASSY. SEALED. COD C (CS)	
-	-	1	-	3 POS. 8 MM HV. REC HSG. 180 DEG. ASSY. SEALED. COD B (CS)	
-	-	-	1	3 POS. 8 MM HV. REC HSG. 180 DEG. ASSY. SEALED. COD A (CS)	

TOLERANCING EN ISO 8015
TOLERIERUNG EN ISO 8015

DIESE ZEICHNUNG IST EIN KONTROLLIERTES DOKUMENT.
BEMASSUNGEN UND TOLERANZEN GEMAESS GPS (ISO STANDARDS).
THIS DRAWING IS A CONTROLLED DOCUMENT.
DIMENSIONING AND TOLERANCING PER GPS (ISO STANDARDS).

DIMENSIONS: mm

TOLERANCES UNLESS OTHERWISE SPECIFIED:
0 PLC ±
1 PLC ±
2 PLC ±
3 PLC ±
4 PLC ±
ANGLES ±

MATERIAL - -
FINISH - -

DWN	M. Kluskova	10MAR2015
CHK	J. Janecka	10MAR2015
APVD	R. Hart	10MAR2015
PRODUCT SPEC	3	
APPLICATION SPEC	3	
WEIGHT	-	

TE Connectivity

NAME 3 POS. HVP800, 180, 50 SQMM CABLE ASSY
-

SIZE	CAGE CODE	DRAWING NO	RESTRICTED TO
A1	-	C-2286917	-

CUSTOMER DRAWING | SCALE 1:1 | SHEET 1 OF 2 | REV G

4805 (3/13)

© 2020 TE Connectivity. All Rights Reserved.

THE DRAWING SHOWS THE 2-DIMENSIONAL REFERENCE COMPONENT CONDITION OF THE ASSEMBLY TO IDENTIFY AND SPECIFY THE NECESSARY DIMENSIONS ONLY. THE DELIVERED PARTS MAY DEVIATE FROM THE DRAWING REGARDING THE ORIENTATION AND POSITION OF EACH COMPONENT (e.g. SLACK CABLE). SO FAR THE FUNCTIONALITY IS NOT CONCERNED.

REVISIONS					
P	LTR	DESCRIPTION	DATE	DWN	APVD
	-	SEE SHEET 1	-	-	-

CODINGS - 1:1

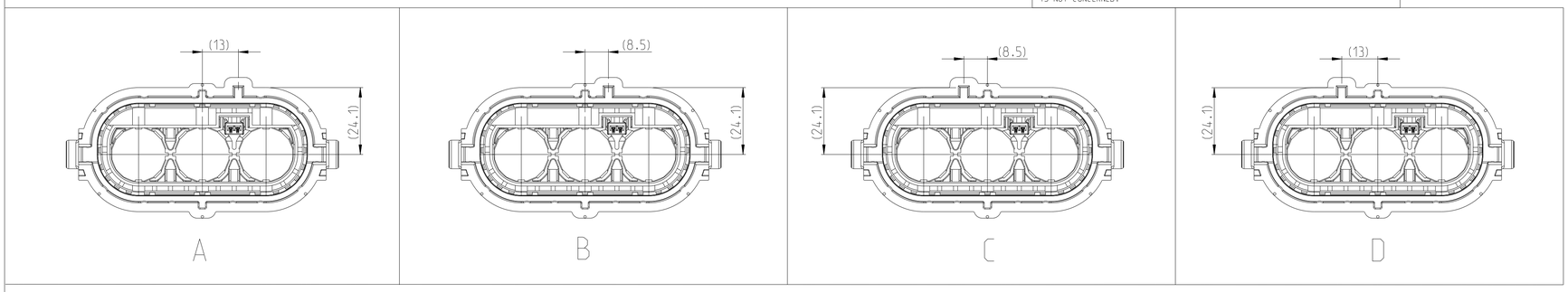

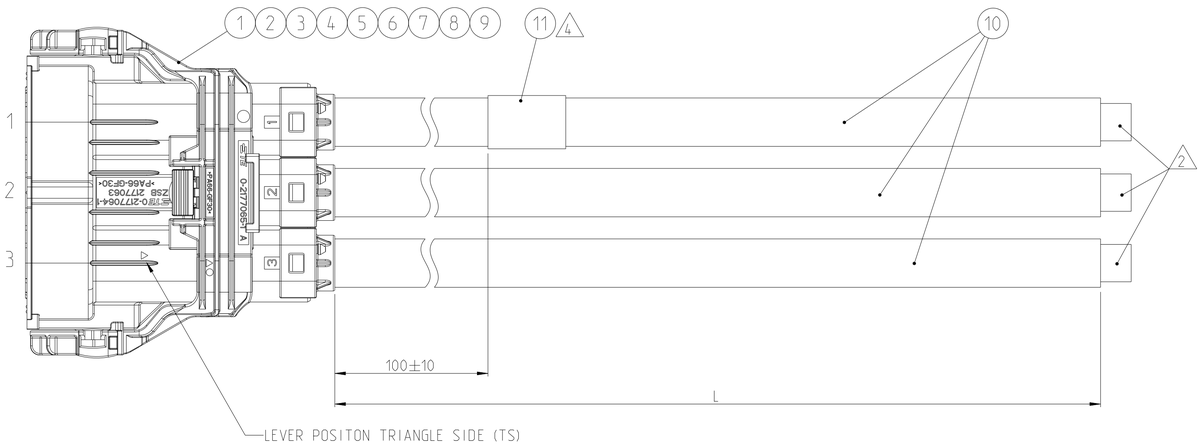

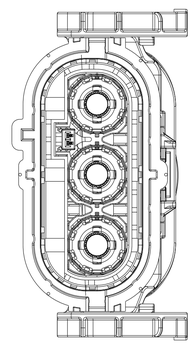

G

	TE PART NO.	REV.	LENGTH L [mm]	TOL. [mm]	CODING	LEVER POSITION
OBSOLETE	~~5-2286917-0~~	~~F~~	~~500~~	~~+30~~	A	TS
OBSOLETE	~~5-2286917-1~~	~~F~~	~~1000~~	~~+30~~		
-	5-2286917-2	G	2000	+35		
-	5-2286917-3	G	3000	+40		
OBSOLETE	~~5-2286917-4~~	~~F~~	~~4000~~	~~+50~~		
OBSOLETE	~~5-2286917-5~~	~~F~~	~~5000~~	~~+60~~		
OBSOLETE	~~6-2286917-0~~	~~F~~	~~500~~	~~+30~~	B	TS
OBSOLETE	~~6-2286917-1~~	~~F~~	~~1000~~	~~+30~~		
OBSOLETE	~~6-2286917-2~~	~~F~~	~~2000~~	~~+35~~		
OBSOLETE	~~6-2286917-3~~	~~F~~	~~3000~~	~~+40~~		
OBSOLETE	~~6-2286917-4~~	~~F~~	~~4000~~	~~+50~~		
OBSOLETE	~~6-2286917-5~~	~~F~~	~~5000~~	~~+60~~		
OBSOLETE	~~7-2286917-0~~	~~D~~	~~500~~	~~+30~~	C	TS
OBSOLETE	~~7-2286917-1~~	~~D~~	~~1000~~	~~+30~~		
OBSOLETE	~~7-2286917-2~~	~~D~~	~~2000~~	~~+35~~		
OBSOLETE	~~7-2286917-3~~	~~D~~	~~3000~~	~~+40~~		
OBSOLETE	~~7-2286917-4~~	~~D~~	~~4000~~	~~+50~~		
OBSOLETE	~~7-2286917-5~~	~~D~~	~~5000~~	~~+60~~		
OBSOLETE	~~8-2286917-0~~	~~D~~	~~500~~	~~+30~~	D	TS
OBSOLETE	~~8-2286917-1~~	~~D~~	~~1000~~	~~+30~~		
OBSOLETE	~~8-2286917-2~~	~~D~~	~~2000~~	~~+35~~		
OBSOLETE	~~8-2286917-3~~	~~D~~	~~3000~~	~~+40~~		
OBSOLETE	~~8-2286917-4~~	~~D~~	~~4000~~	~~+50~~		
OBSOLETE	~~8-2286917-5~~	~~D~~	~~5000~~	~~+60~~		

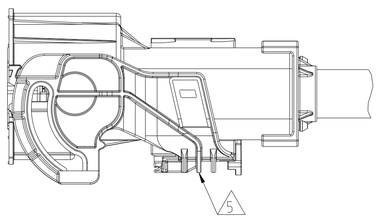

4 **LABEL LEGEND:**

TE
TE PN: X-2286917-Y Rev. __ — CURRENT REV.
DD/MM/YY — DATE CODE
2.7 kV DC TEST PASSED

NOTES

1 PACKAGING:
HOUSING WRAPPED IN FOAM AND FIXED WITH RUBBER BAND.
CABLE ASSEMBLY PROTECTED BY PAPER CUSHIONS INSIDE OF STANDARD BOX ACCORDING TE SPEC. 107-18087. 107-18064.
DAMAGED TO BE AVOIDED.

2 ELECTRICAL TEST ACCORDING TE SPECIFICATION 108-18857.
USE CURRENT REVISION ALWAYS.
MIN. 10 mm STRIPPING OF OUTER JACKET AND BRAID FOR ELECTRICAL TEST PURPOSE.

3 PRODUCT SPECIFICATION: 108-94297. 108-94451
APPLICATION SPECIFICATION: 114-94130. 114-94325

4 MANUFACTURING CODE:
TE PART NO., CURRENT REV. LEVEL AND DATE CODE (DD.MM.YY).
TO BE PRINTED ON LABEL (ITEM 11).
LABEL TO BE APPLIED TO THE CABLE AFTER SUCCESSFUL ELECTRICAL TEST.

5 LEVER POSITION: CLOSED ON DELIVERY

G

QTY 8--x	QTY 7--x	QTY 6--x	QTY 5--x	DESCRIPTION	ITEM NO.
1	1	1	1	LABEL. HELL. TYP 323. 25.4 x 95.25	11
see table	see table	see table	see table	1 POS. POWER CABLE. 50 SQMM	10
3	3	3	3	SHIELDING SLEEVE. 180 DEG	9
3	3	3	3	INSULATION INSERT. 180 DEG	8
3	3	3	3	8 MM HV. CONTACT. ASSY	7
3	3	3	3	PROTEC. COVER 8 MM HV. 90 DEG. 50 SQMM	6
3	3	3	3	SINGLE WIRE SEAL. 8 MM HV. 90 DEG. 50 SQMM	5
3	3	3	3	SHIELDING CRIMP FERRULE. 180 DEG OUTER	4
3	3	3	3	PROTECTION CAP. 180 DEG	3
3	3	3	3	SHIELD CRIMP FERRULE. 180 DEG INNER	2
1	-	-	-	3 POS. 8 MM HV. REC HSG. 180 DEG. ASSY. SEALED. COD D (TS)	1
-	1	-	-	3 POS. 8 MM HV. REC HSG. 180 DEG. ASSY. SEALED. COD C (TS)	
-	-	1	-	3 POS. 8 MM HV. REC HSG. 180 DEG. ASSY. SEALED. COD B (TS)	
-	-	-	1	3 POS. 8 MM HV. REC HSG. 180 DEG. ASSY. SEALED. COD A (TS)	

DIESE ZEICHNUNG IST EIN KONTROLLIERTES DOKUMENT.
BEMASSUNGEN UND TOLERANZEN GEMAESS GPS (ISO STANDARDS).
THIS DRAWING IS A CONTROLLED DOCUMENT.
DIMENSIONING AND TOLERANCING PER GPS (ISO STANDARDS).

TOLERANCING EN ISO 8015
TOLERIERUNG EN ISO 8015

DIMENSIONS: mm
TOLERANCES UNLESS OTHERWISE SPECIFIED:
0 PLC ±
1 PLC ±
2 PLC ±
3 PLC ±
4 PLC ±
ANGLES ±
MATERIAL -
FINISH -
WEIGHT -

DWN	M. Kluskova	10MAR2015
CHK	J. Janecka	10MAR2015
APVD	R. Hort	10MAR2015
PRODUCT SPEC	3	
APPLICATION SPEC	3	

TE Connectivity

NAME: 3 POS. HVP800. 180. 50 SQMM CABLE ASSY

SIZE	CAGE CODE	DRAWING NO	RESTRICTED TO
A1	-	C-2286917	-

CUSTOMER DRAWING | SCALE 1:1 | SHEET 2 OF 2 | REV G

4805 (3/13)