THIS DRAWING IS UNPUBLISHED. RELEASED FOR PUBLICATION -,- .
© COPYRIGHT - By - ALL RIGHTS RESERVED.

| LOC | DIST |
|---|---|
| — | — |

REVISIONS

| P | LTR | DESCRIPTION | DATE | DWN | APVD |
|---|---|---|---|---|---|
| | K1 | REVISED PER ECO-11-005030 | 11MAR11 | RK | HMR |

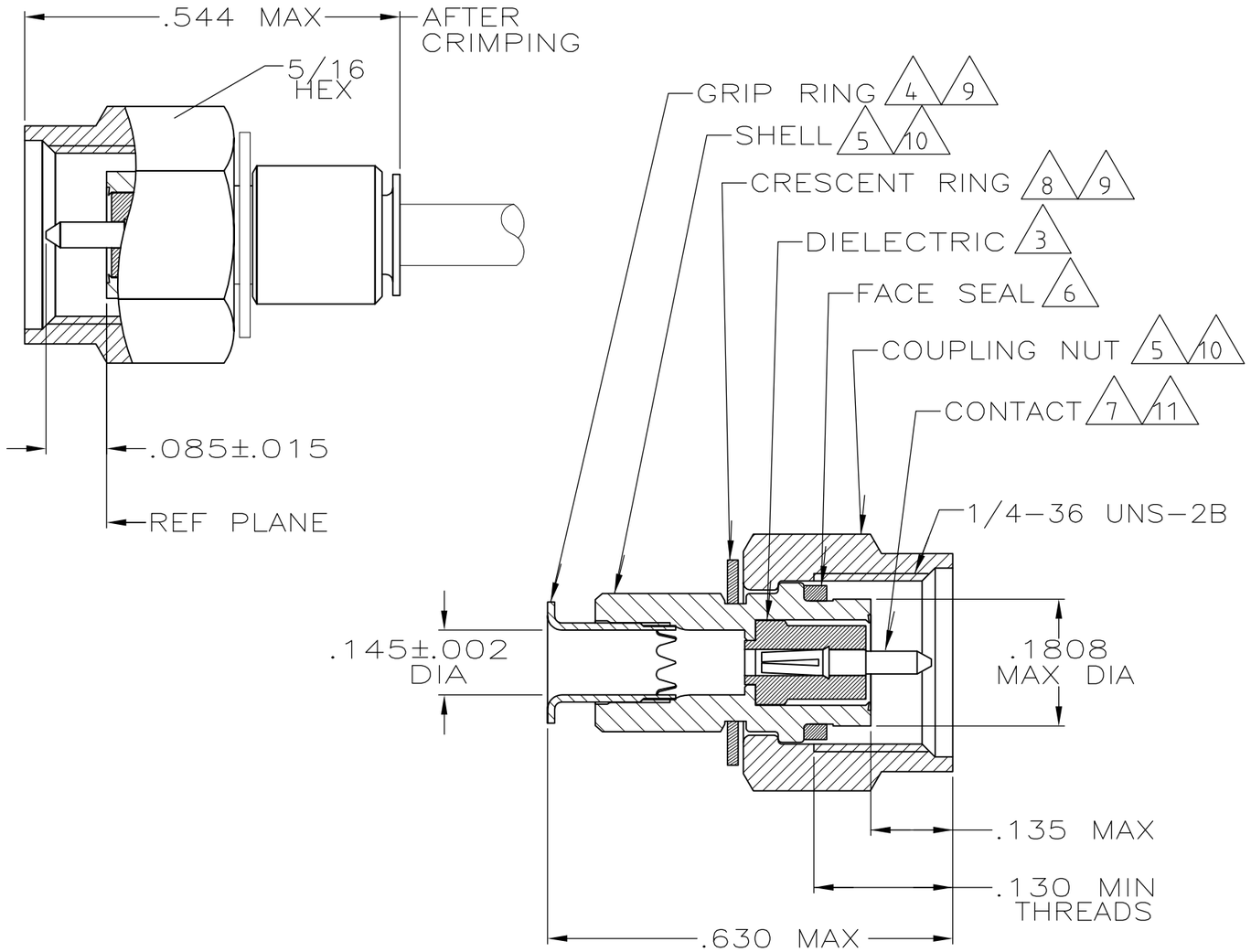


1. FOR USE WITH: RG-402/U, .141 SEMI-RIGID CABLE
2. SEE I.S. 6788

3. PTFE PER ASTM D1710
4. BRASS PER ASTM-B-36
5. STAINLESS STEEL PER ASTM-A-582
6. SILICONE RUBBER PER ZZ-R-765
7. BERYLLIUM COPPER PER ASTM-B-197
8. BERYLLIUM COPPER, ALLOY #25
9. NICKEL PL PER QQ-N-290
10. PASSIVATION PER ASTM A967
11. GOLD PL PER MIL-G-45204

12. 00779 M39012/79B3104
13. .500 MIN LENGTH OF STRAIGHT CABLE REQUIRED TO APPLY THE CONNECTOR

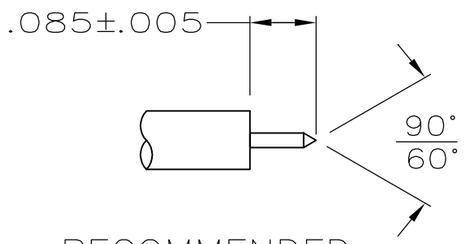


RECOMMENDED STRIP LENGTH

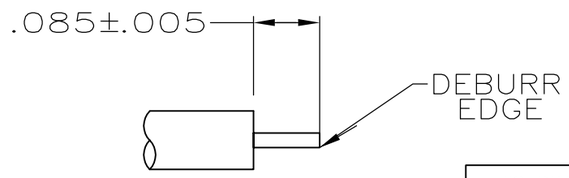


OPTIONAL STRIP LENGTH

227743-1

PART NO

THIS DRAWING IS A CONTROLLED DOCUMENT.

DIMENSIONS: mm

TOLERANCES UNLESS OTHERWISE SPECIFIED:
0 PLC ± -
1 PLC ± -
2 PLC ± -
3 PLC ± -
4 PLC ± -
ANGLES ± -

MATERIAL 3 THRU 8

FINISH 9 THRU 11

| | | |
|---|---|---|
| DWN | K.HEILIG | 8-12-87 |
| CHK | M.SNEED | 8-12-87 |
| APVD | M.WALMSLEY | 8-12-87 |
| PRODUCT SPEC | 108-12055 | |
| APPLICATION SPEC | — | |
| WEIGHT | — | |

CUSTOMER DRAWING

TE Connectivity

NAME: PLUG,MIL-B,SERIES SMA — —

| SIZE | CAGE CODE | DRAWING NO | RESTRICTED TO |
|---|---|---|---|
| A3 | 00779 | C-227743-1 | — |

SCALE 5:1 | SHEET 1 OF 1 | REV K1