© 2020 TE Connectivity. All Rights Reserved.

REVISIONS

| P | LTR | DESCRIPTION | DATE | DWN | APVD |
|---|---|---|---|---|---|
| | A | INITIAL RELEASE | 25SEP2019 | JC | TK |
| | A1 | REVISED ECR-20-005211 | 02MAR2020 | JC | TK |

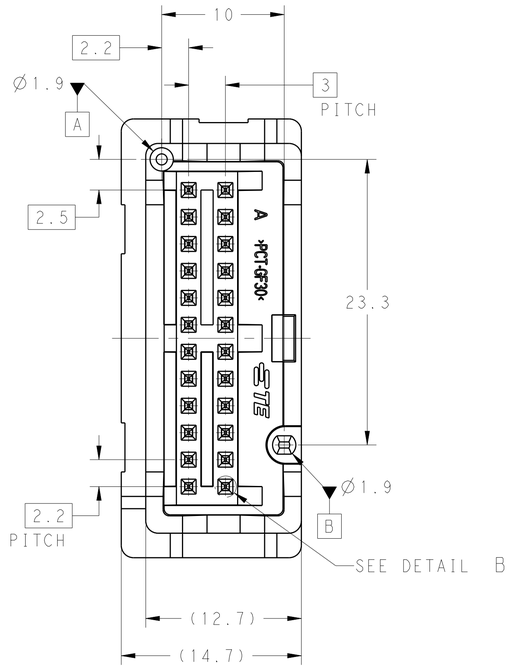


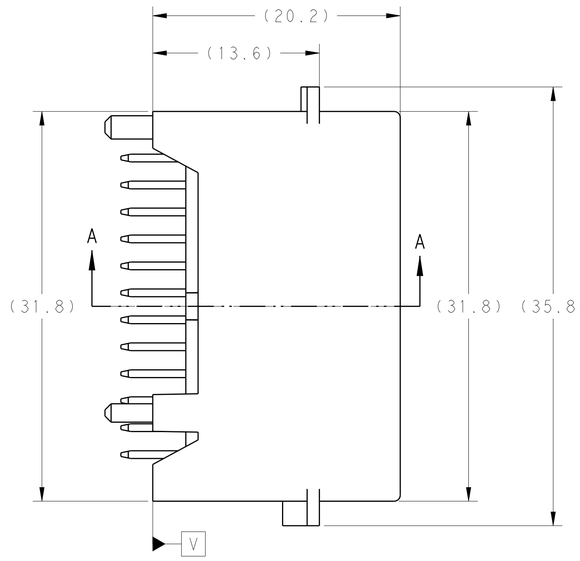


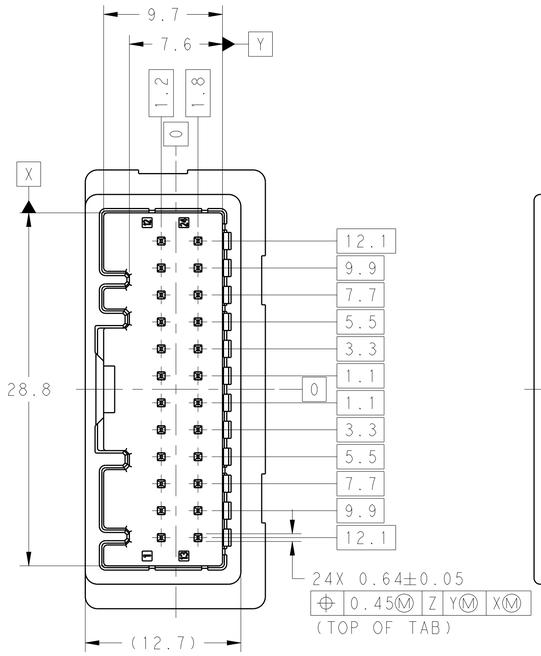


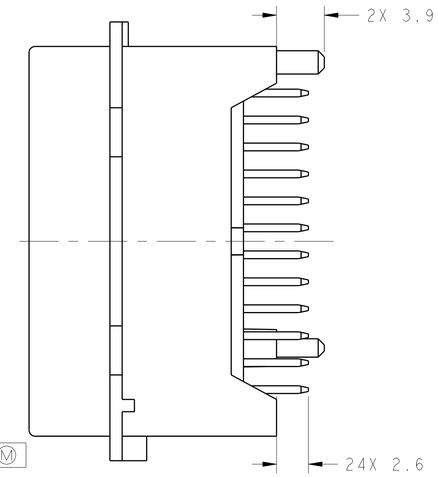


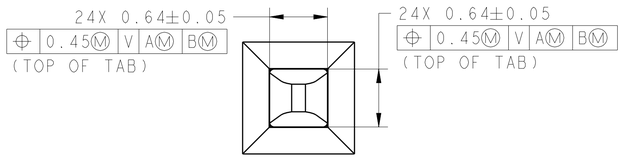


DETAIL B
SCALE 30:1

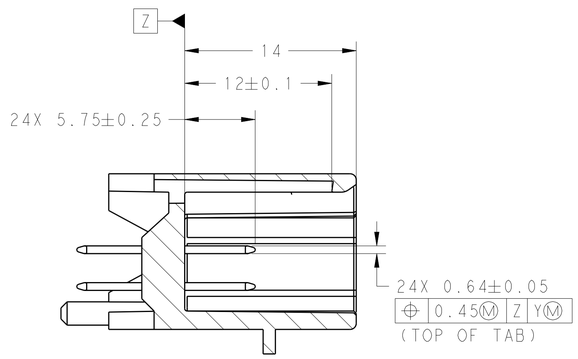


SECTION A-A

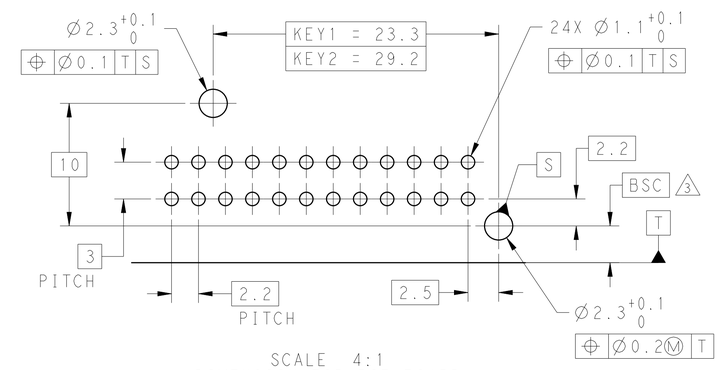


SCALE 4:1
DIMENSION FOR PCB BOARD
THICKNESS 1.6±0.1

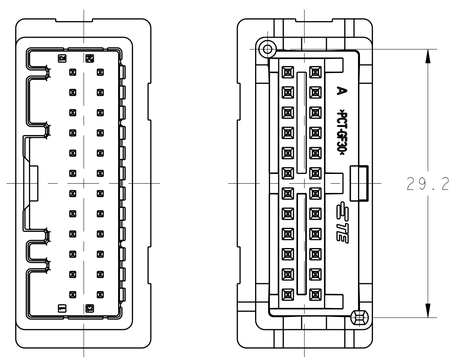


PART NUMBER : 2237026-2
KEY CODE : 2
COLOR : GRAY

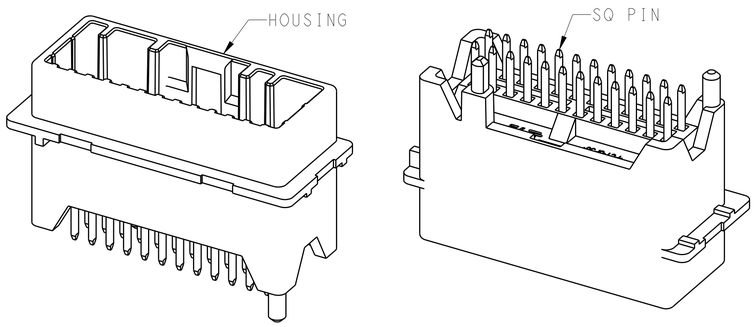


NOTE:

1. MATING PLUG PART NUMBER:
   KEY 1: 1717112-1
   KEY 2: 1717112-1
2. HANDLING THIS PART SHOULD FOLLOW INSTRUCTION SHEET: 411-51004

3. DATUMS AND BASIC DIMENSIONS ESTABLISHED BY CUSTOMER

4. ALL SURFACE PLATED EXCEPT FOR SQ PIN TIP

PN: 2237026-1 AS SHOWN

| KEY CODE | PACKING STYLE | | PLATING | MATERIAL | | COLOR | PART NUMBER |
|---|---|---|---|---|---|---|---|
| 2 | PAPER BOX | TUBE | PRE-TIN 4 | BRASS | PCT | GREY | 2237026-2 |
| 1 | | | | | | BLACK | 2237026-1 |

THIS DRAWING IS A CONTROLLED DOCUMENT.

DIMENSIONS: mm

TOLERANCES UNLESS OTHERWISE SPECIFIED:
0 PLC ±0.3
1 PLC ±0.3
2 PLC ±0.3
3 PLC ±0.3
4 PLC ±0.3
ANGLES ±5°

MATERIAL: SEE TABLE
FINISH: SEE TABLE

DWN 14MAY2019 JASON CHOW
CHK 14MAY2019 T. YAMAMOTO
APVD 14MAY2019 T. KIMURA
PRODUCT SPEC -
APPLICATION SPEC -
WEIGHT 5.5g

TE Connectivity

NAME: 24P 0.64(025) HEADER ASSEMBLY V-TYPE, THROUGH HOLE

SIZE A1 | CAGE CODE 00779 | DRAWING NO C-2237026 | RESTRICTED TO -

CUSTOMER DRAWING | SCALE 4:1 | SHEET 1 OF 1 | REV A1

4805 (3/13)