THIS DRAWING IS UNPUBLISHED. RELEASED FOR PUBLICATION 2014
© COPYRIGHT 2014 TE Connectivity ALL RIGHTS RESERVED.

VIEW EXPLODED STATUS
2:1

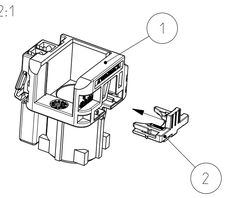

0-2236326-X

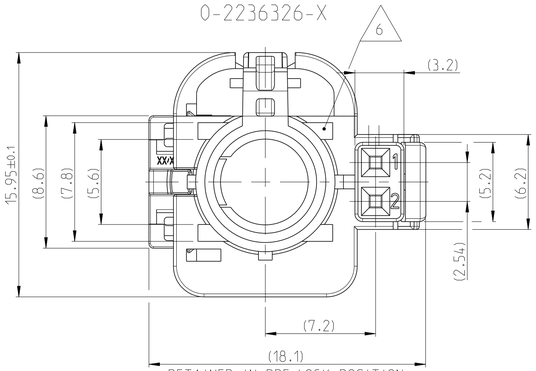

RETAINER IN PRE-LOCK POSITION
Kontaktsicherung in Vorraststellung

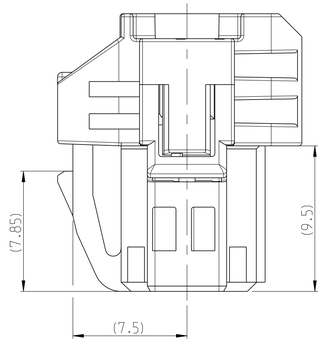

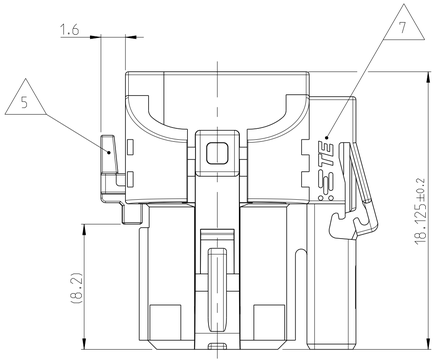

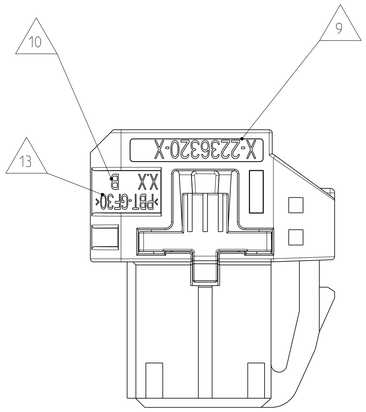

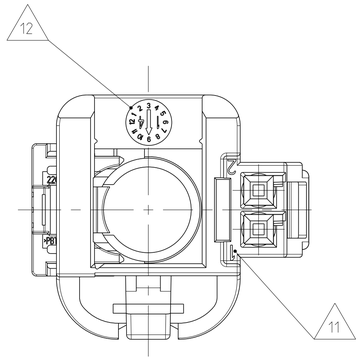

VIEW ASSY IN CLOSED STATUS
2:1

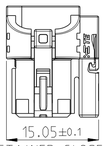

RETAINER CLOSED
Kontaktsicherung geschlossen

2:1	2:1	2:1	2:1
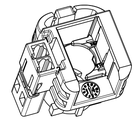	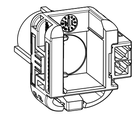		
VARIANT 1 0-...-X (X=1-7) CABLE OUTLET DOWN	VARIANT 2 1-...-X (X=1-7) CABLE OUTLET UP	VARIANT 3 2-...-X (X=1-7) CABLE OUTLET RIGHT	VARIANT 4 3-...-X (X=1-7) CABLE OUTLET LEFT

2-...-X

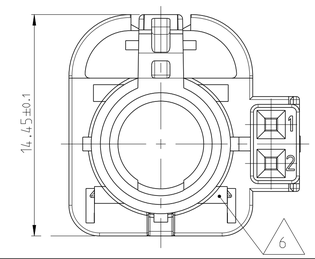

3-...-X

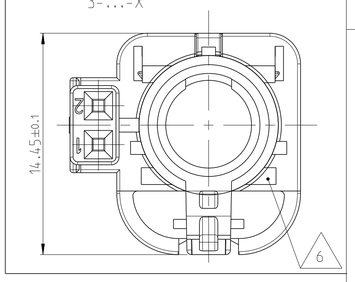

NOTES
Bemerkungen

1. PACKAGING: BULK MATERIAL IN PE-BAG PACKED IN CARTON
   Verpackung: Schuettgut mit PE-Beutel verpackt in Karton
2. DETAILS OF DESIGN ARE LEFT TO TE CONNECTIVITY
   Einzelheiten der Ausfuehrung bleiben TE Connectivity ueberlassen
3. HSD INTERFACE ACC. TO 4E0.900.962.B
   HSD Schnittstelle nach 4E0.900.962.B
4. ALL DIMENSIONS IN BRACKETS () ONLY FOR INFORMATION
   Alle Maße in () nur zur Information
5. CONDITION AS SUPPLIED: RETAINER IN PRE-LOCKED POSITION
   Lieferzustand: Verriegelung in Vorraststellung
6. ALL CODING RIBS SHOWN
   Alle Kodierrippen dargestellt
7. TE CONNECTIVITY LOGO
   TE Connectivity Logo
8. ORDER-NUMBER
   Bestell-Nummer
9. PART NUMBER SINGLE PART
   Teilenummer Einzelteil
10. REVISION-NUMBER SINGLE PART
    Werkzeugaenderungsindex Einzelteil
11. CAVITY NUMBER SINGLE PART
    Kammernummerierung Einzelteil
12. PRODUCTION-DATE
    Produktions-Datum
13. MATERIAL MARKING
    Werkstoffkennzeichnung

REVISIONS

P	LTR	DESCRIPTION	DATE	DWN	APVD
	A1	E-15-011821	10AUG2015	FF	OF
	A2	E-15-013110	04SEP2015	SN	MR
	A3	E-20-000193	07JAN2020	JPN	JP
	A4	Activate PN 3-2236326-3 in BOM	14SEP2020	JJH	JP

VARIANT	TE-ASSY-PN	REVISION ASSY	CODE	DESCRIPTION	COLOR / SIMILAR RAL	MATERIAL	WEIGHT [g]	POS.
4	~~3-2236326-7~~	A	M	RETAINER	TRAFFIC PURPLE/ 4006	PBT-GF10	1.62	2
				CODING COVER	PASTEL ORANGE/ 2003	PBT-GF30		1
	~~3-2236326-6~~		L	RETAINER	TRAFFIC PURPLE/ 4006	PBT-GF10		2
				CODING COVER	YELLOW GREEN/ 6018	PBT-GF30		1
	~~3-2236326-5~~		K	RETAINER	TRAFFIC PURPLE/ 4006	PBT-GF10		2
				CODING COVER	CURRY/ 1027	PBT-GF30		1
	~~3-2236326-4~~		J	RETAINER	TRAFFIC PURPLE/ 4006	PBT-GF10		2
				CODING COVER	BEIGE/ 1001	PBT-GF30		1
	3-2236326-3		H	RETAINER	TRAFFIC PURPLE/ 4006	PBT-GF10		2
				CODING COVER	VIOLET/ 4006	PBT-GF30		1
	3-2236326-2		G	RETAINER	TRAFFIC PURPLE/ 4006	PBT-GF10		2
				CODING COVER	GREY/ 7031	PBT-GF30		1
	3-2236326-1		O	RETAINER	TRAFFIC PURPLE/ 4006	PBT-GF10		2
				CODING COVER	LIGHT GREEN/ 6027	PBT-GF30		1
3	2-2236326-7	A	F	RETAINER	TRAFFIC PURPLE/ 4006	PBT-GF10	1.62	2
				CODING COVER	BROWN/ 8011	PBT-GF30		1
	2-2236326-6		E	RETAINER	TRAFFIC PURPLE/ 4006	PBT-GF10		2
				CODING COVER	GREEN/ 6002	PBT-GF30		1
	2-2236326-5		D	RETAINER	TRAFFIC PURPLE/ 4006	PBT-GF10		2
				CODING COVER	BORDEAUX/ 4004	PBT-GF30		1
	2-2236326-4		C	RETAINER	TRAFFIC PURPLE/ 4006	PBT-GF10		2
				CODING COVER	BLUE/ 5005	PBT-GF30		1
	2-2236326-3		B	RETAINER	TRAFFIC PURPLE/ 4006	PBT-GF10		2
				CODING COVER	WHITE/ 9001	PBT-GF30		1
	2-2236326-2		A	RETAINER	TRAFFIC PURPLE/ 4006	PBT-GF10		2
				CODING COVER	BLACK/ 9005	PBT-GF30		1
	2-2236326-1		Z	RETAINER	TRAFFIC PURPLE/ 4006	PBT-GF10		2
				CODING COVER	WATER BLUE/ 5021	PBT-GF30		1
2	~~1-2236326-7~~	A	M	RETAINER	TRAFFIC PURPLE/ 4006	PBT-GF10	1.62	2
				CODING COVER	PASTEL ORANGE/ 2003	PBT-GF30		1
	~~1-2236326-6~~		L	RETAINER	TRAFFIC PURPLE 4006	PBT-GF10		2
				CODING COVER	YELLOW GREEN/ 6018	PBT-GF30		1
	~~1-2236326-5~~		K	RETAINER	TRAFFIC PURPLE 4006	PBT-GF10		2
				CODING COVER	CURRY/ 1027	PBT-GF30		1
	~~1-2236326-4~~		J	RETAINER	TRAFFIC PURPLE 4006	PBT-GF10		2
				CODING COVER	BEIGE/ 1001	PBT-GF30		1
	1-2236326-3		H	RETAINER	TRAFFIC PURPLE 4006	PBT-GF10		2
				CODING COVER	VIOLET/ 4006	PBT-GF30		1
	1-2236326-2		G	RETAINER	TRAFFIC PURPLE 4006	PBT-GF10		2
				CODING COVER	GREY/ 7031	PBT-GF30		1
	~~1-2236326-1~~		O	RETAINER	TRAFFIC PURPLE 4006	PBT-GF10		2
				CODING COVER	LIGHT GREEN/ 6027	PBT-GF30		1
1	0-2236326-7	A	F	RETAINER	TRAFFIC PURPLE 4006	PBT-GF10	1.62	2
				CODING COVER	BROWN/ 8011	PBT-GF30		1
	0-2236326-6		E	RETAINER	TRAFFIC PURPLE 4006	PBT-GF10		2
				CODING COVER	GREEN/ 6002	PBT-GF30		1
	0-2236326-5		D	RETAINER	TRAFFIC PURPLE 4006	PBT-GF10		2
				CODING COVER	BORDEAUX/ 4004	PBT-GF30		1
	0-2236326-4		C	RETAINER	TRAFFIC PURPLE 4006	PBT-GF10		2
				CODING COVER	BLUE/ 5005	PBT-GF30		1
	0-2236326-3		B	RETAINER	TRAFFIC PURPLE 4006	PBT-GF10		2
				CODING COVER	WHITE/ 9001	PBT-GF30		1
	0-2236326-2		A	RETAINER	TRAFFIC PURPLE 4006	PBT-GF10		2
				CODING COVER	BLACK/ 9005	PBT-GF30		1
	0-2236326-1		Z	RETAINER	TRAFFIC PURPLE 4006	PBT-GF10		2
				CODING COVER	WATER BLUE/ 5021	PBT-GF30		1

A4

CODING COVER, PLUG SIDE, CODINGS SIMILAR AS SHOWN IN VIEW!
Kodierkappe (Steckseite), Kodierungen aehnlich wie in Darstellung!

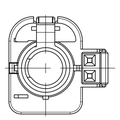	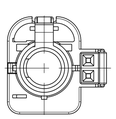	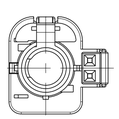	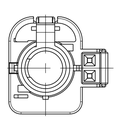	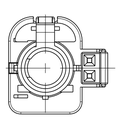	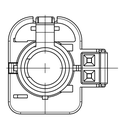	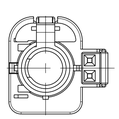
0-/2-..-1 CODING Z	0-/2-..-2 CODING A	0-/2-..-3 CODING B	0-/2-..-4 CODING C	0-/2-..-5 CODING D	0-/2-..-6 CODING E	0-/2-..-7 CODING F
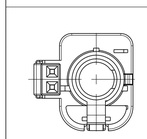	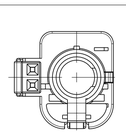	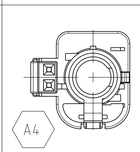	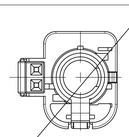	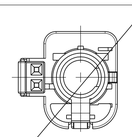	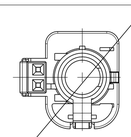	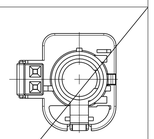
3-..-1 CODING O	1-/3-..-2 CODING G	1-/3-..-3 CODING H	1-/3-..-4 CODING J	1-/3-..-5 CODING K	1-/3-..-6 CODING L	1-/3-..-7 CODING M

SEE DRAWING 2177954	HSD90-CONTACT PN 2236774-X MQS-CONTACT PN 928999-X (0.35mm²) MQS-CONTACT PN 963715-X (0.75mm²)
SUITABLE MATING PART	SUITABLE CONTACTS

THIS DRAWING IS A CONTROLLED DOCUMENT.

DIMENSIONS: mm

TOLERANCES UNLESS OTHERWISE SPECIFIED:
0 PLC ±0.3
1 PLC ±0.3
2 PLC ±0.3
3 PLC ±
4 PLC ±
ANGLES ±2°

MATERIAL: SEE TABLE
FINISH: -

DWN S. Nagel 19MAR2014
CHK O. Fuck 19MAR2014
APVD U. Gassauer 19MAR2014
PRODUCT SPEC 108-94338
APPLICATION SPEC (114-94117)
WEIGHT -

TE Connectivity

NAME: HSD90 HYBRID, SUB-ASSY
HSD 90 Hybrid, Zusammenbau

SIZE A1 | CAGE CODE - | DRAWING NO C-2236326 | RESTRICTED TO -

Customer Drawing | SCALE 5:1 | SHEET 1 OF 1 | REV A4

4805 (3/13)