THIS DRAWING IS UNPUBLISHED. RELEASED FOR PUBLICATION -,- .
© COPYRIGHT - By - ALL RIGHTS RESERVED.

LOC	DIST
—	—

REVISIONS

P	LTR	DESCRIPTION	DATE	DWN	APVD
	A	RELEASED	3-12-15	CT	DW

COMPONENT	MATERIAL	FINISH
HOUSING COUPLING NUT CAP	STAINLESS STEEL PER ASTM-A484 AND ASTM-A582, TYPE 303	GOLD PLATE PER ASTM B-488
DIELECTRIC	TFE FLUOROCARBON PER ASTM-D-1457	N/A
CENTER CONTACT	BERYLLIUM COPPER PER ASTM B 196, ALLOY C17300, CONDITION H	GOLD PLATE PER ASTM B-488
RETAINING RING	BERYLLIUM COPPER PER ASTM B 194, ALLOY C17200, CONDITION H	N/A

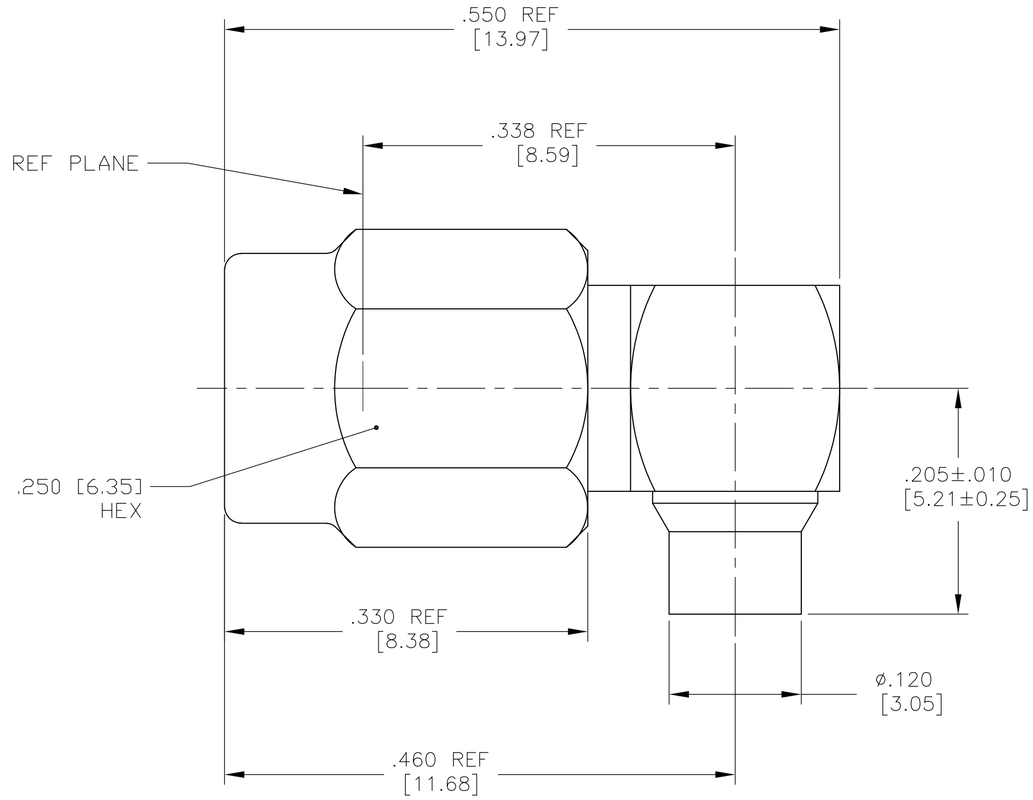

DESIGNED FOR USE WITH .085 DIA SR CABLE	
CABLE ENTRY DIAMETER MINIMUM	
HOUSING	.0875 [2.222]
CONTACT	.023 [0.58]

ELECTRICAL	MECHANICAL	ENVIRONMENTAL
Nominal Impedance (Ohms) 50	Interface Dimensions MIL-STD-348A FIG. 319.1	TEMPERATURE RATING -55°C TO +165°C
Frequency Range (GHz) D.C. TO 26	Recommended Mating Torque (In-Lbs) 7-8	Vibration - MIL-STD-202, Method 204, Condition D
Volt Rating @ Sea Level (VRMS) 250	Force to Engage and Disengage (In-Lbs MAX) 2.0	Shock - MIL-STD-202, Method 213, Condition I
@ 70,000 Feet (VRMS) 60	Center Contact Captivation	Thermal shock MIL-STD-202, Method 107 Test Condition B
VSWR 1.15 + .015 f(GHz)	Axial (Lbs MIN) N/A	EXCEPT HIGH TEMP +85°C
Insertion Loss .04$\sqrt{f\text{GHz}}$	Radial(In-Oz MIN) N/A	Moisture Resistance - MIL-STD-202, Method 106
RF Leakage -[60 - f(GHz)] db MAX	Coupling Nut Retention 60 Lbs MIN	Corrosion - MIL-STD-202, Method 101, Condition B
Corona, 70,000 Ft (VRMS MIN) 190	Cable Retention	
Dielectric Withstanding Voltage (VRMS) 750	Axial Force (Lbs) 30 MIN	
Contact Resistance (Milliohms MAX)	Torque (In-Oz) 16 MIN	
Center Contact 4.0	Weight (Grams) TBD	
Outer Contact 2.0		
Cable To Housing (Milliohms MAX) 0.5		
RF High Potential (VRMS MIN @ 5 MHz) 500		
I.R.(Megohms) 5000		

2221788-1
PART NUMBER

THIS DRAWING IS A CONTROLLED DOCUMENT.

DIMENSIONS: INCHES [mm]

TOLERANCES UNLESS OTHERWISE SPECIFIED:
0 PLC ± -
1 PLC ± -
2 PLC ± -
3 PLC ± .005 [0.13]
4 PLC ± -
ANGLES ± -

MATERIAL: SEE TABLE
FINISH: SEE TABLE

DWN C.C.THOMAS 3-12-15
CHK D.WILSON 3-12-15
APVD D.WILSON 3-12-15
PRODUCT SPEC —
APPLICATION SPEC 408-4792
WEIGHT —

TE Connectivity

NAME: SSMA RIGHT ANGLE CABLE PLUG ASSY, DIRECT SOLDER ATTACHMENT
—

SIZE A2 | CAGE CODE 00779 | DRAWING NO C-2221788 | RESTRICTED TO —

CUSTOMER DRAWING | SCALE 10:1 | SHEET 1 OF 1 | REV A

1471-9 (3/11)