THIS DRAWING IS UNPUBLISHED. RELEASED FOR PUBLICATION -,- .
© COPYRIGHT - By - ALL RIGHTS RESERVED.

REVISIONS

P	LTR	DESCRIPTION	DATE	DWN	APVD
	B	REVISED PER ECO-17-015513	19DEC2017	PHM	CT

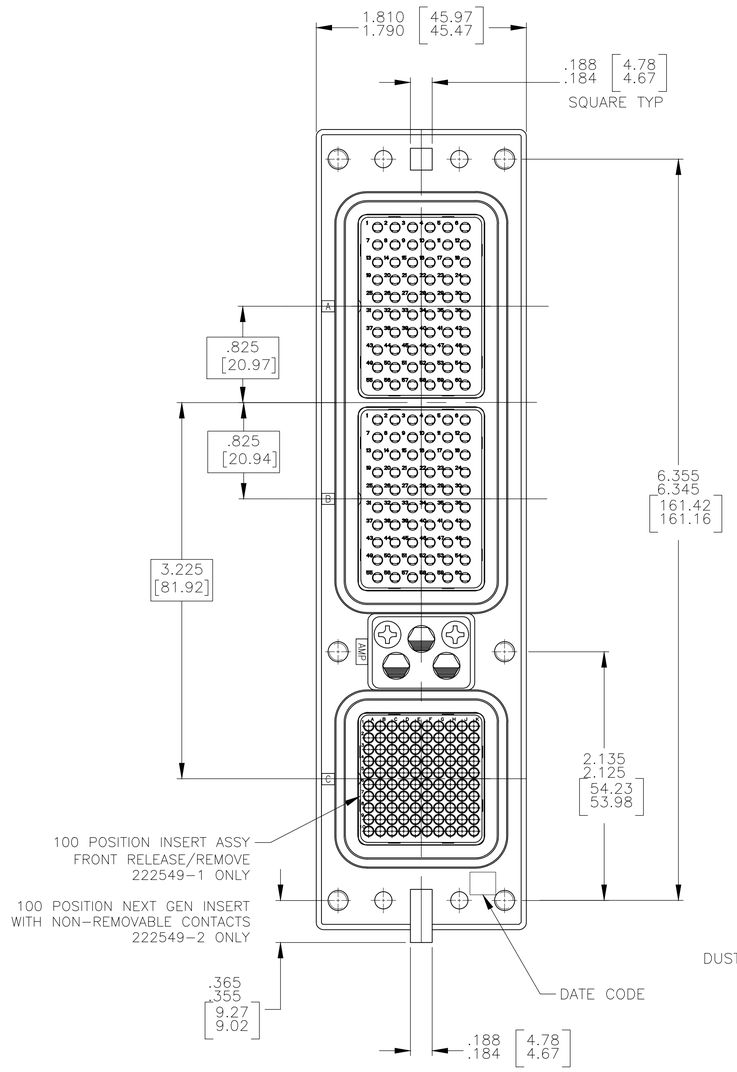

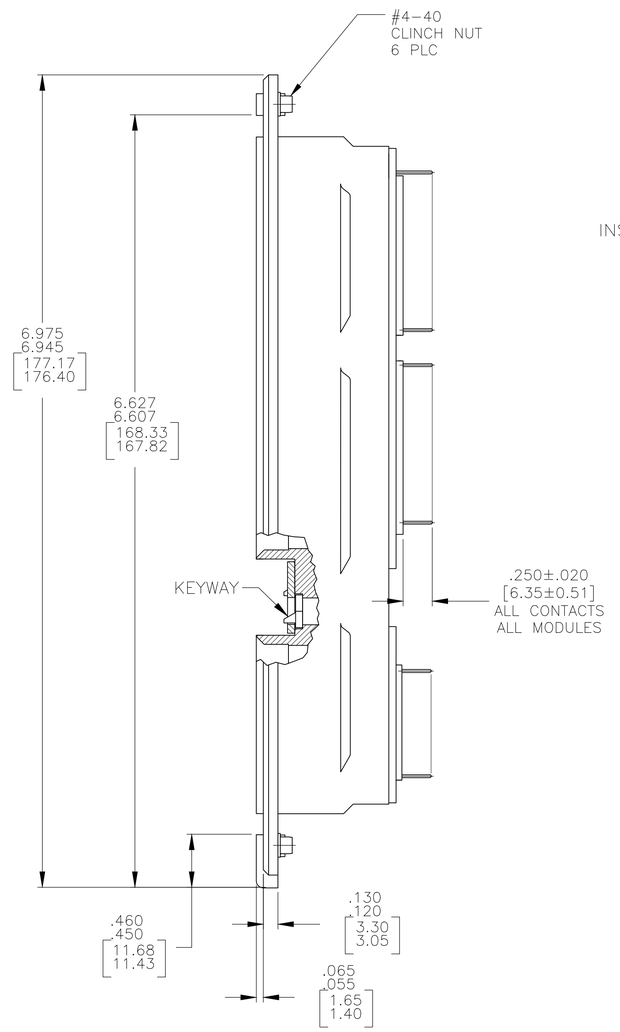

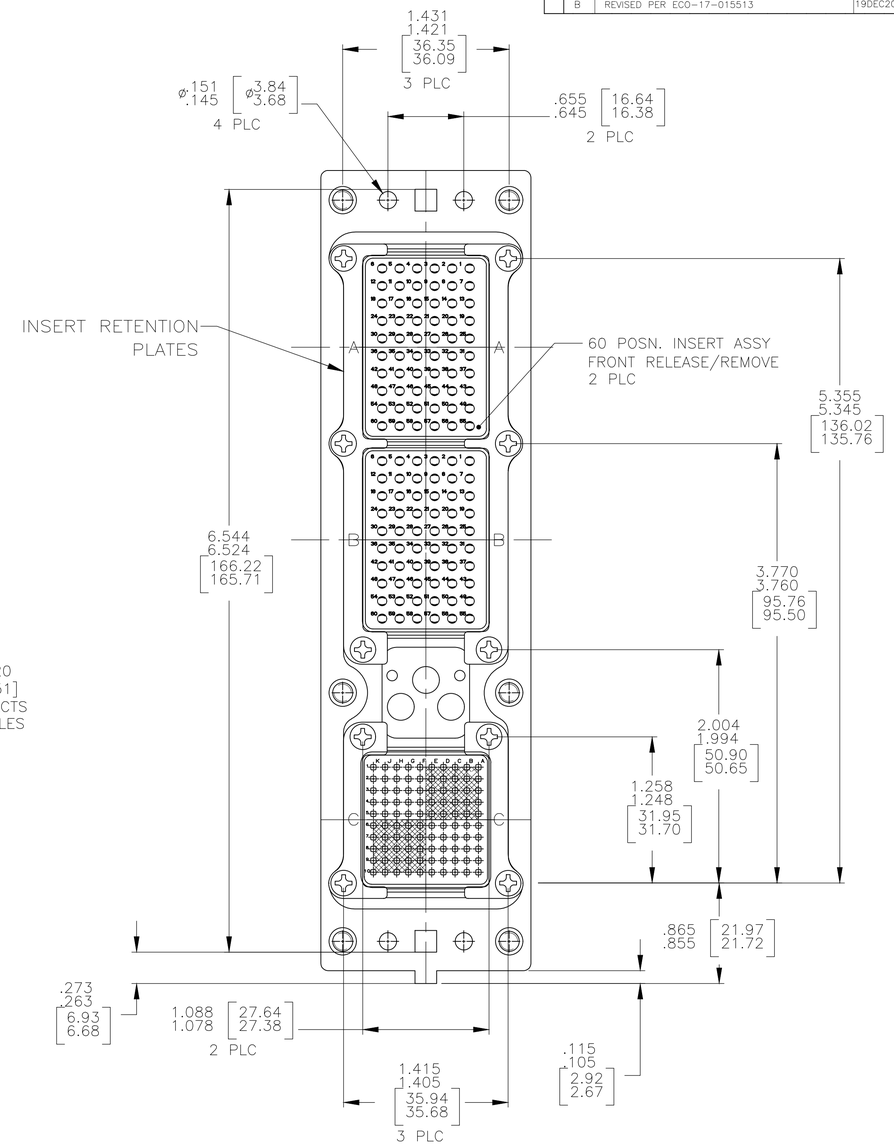

KEYING POSITION	CONTACTS INCLUDED AND INSTALLED	PART NUMBER
"00"	MODULE A 1-448138-2 (SZ 20 POSTED PIN CONTACT; QTY=60) MODULE B 1-448138-2 (SZ 20 POSTED PIN CONTACT; QTY=60) MODULE C SZ 22 NON-REMOVABLE SOCKET CONTACTS, QTY=100	5 2221549-2
"00"	MODULE A 1-448138-2 (SZ 20 POSTED PIN CONTACT; QTY=60) MODULE B 1-448138-2 (SZ 20 POSTED PIN CONTACT; QTY=60) MODULE C 211431-4 (SZ 22 POSTED SOCKET CONTACT; QTY=100)	2221549-1

1. CONNECTOR DIMENSIONS ARE PER ARINC 600 SPECIFICATION
2. DUST COVER INSTALLED FOR SHIPPING.
3. KEYING SHOWN IN POSITION "01" FOR REFERENCE ONLY. SEE TABLE FOR KEYING POSITION. FOR POSITION "00" KEYING SHIPPED UNASSEMBLED.
4. CONTACTS NOT SHOWN IN FRONT AND REAR VIEWS FOR CLARITY.

5 NOT RELEASED FOR PRODUCTION.

COMPONENT	MATERIAL	FINISH
SHELL	DIE CAST ALUMINUM PER ASTM-B-85	ELECTROLESS NICKEL PER MIL-C-26074
INSERT RETENTION PLATES	ALUMINUM ALLOY PER ASTM-B-209	ELECTROLESS NICKEL PER MIL-C-26074
SCREWS	STEEL OR STAINLESS STEEL	PASSIVATED
POLARIZING KEYS	ZINC ALLOY PER ASTM-B-86	–
POLARIZING KEY RETAINING PLATE	ALUMINUM ALLOY PER ASTM-B-209	BLUE ANODIZED PER MIL-A-8625
INSERTS	THERMOSET OR THERMOPLASTIC PPS PER MIL-M-24519	–
DUST COVER	CONDUCTIVE THERMOPLASTIC	–

THIS DRAWING IS A CONTROLLED DOCUMENT.

DIMENSIONS: INCHES

TOLERANCES UNLESS OTHERWISE SPECIFIED:
0 PLC ± –
1 PLC ± –
2 PLC ± –
3 PLC ± –
4 PLC ± –
ANGLES ± –

MATERIAL: SEE TABLE
FINISH: SEE TABLE

DWN C.C.THOMAS 11-9-12
CHK W.BERNHART 11-9-12
APVD W.BERNHART 11-9-12
PRODUCT SPEC —
APPLICATION SPEC —
WEIGHT

TE Connectivity

NAME: RCPT ASSY,SIZE 2,ARINC 600 (60/60/100), FR –

SIZE	CAGE CODE	DRAWING NO	RESTRICTED TO
A1	00779	C-2221549	—

CUSTOMER DRAWING | SCALE 3:2 | SHEET 1 OF 1 | REV B

4805 (1/15)