THIS DRAWING IS UNPUBLISHED. RELEASED FOR PUBLICATION 20
© COPYRIGHT 20 BY - ALL RIGHTS RESERVED.

LOC	DIST
-	-

REVISIONS

P	LTR	DESCRIPTION	DATE	DWN	APVD
	A	RELEASED PER ECO-12-014906	16AUG2012	RJM3	WB

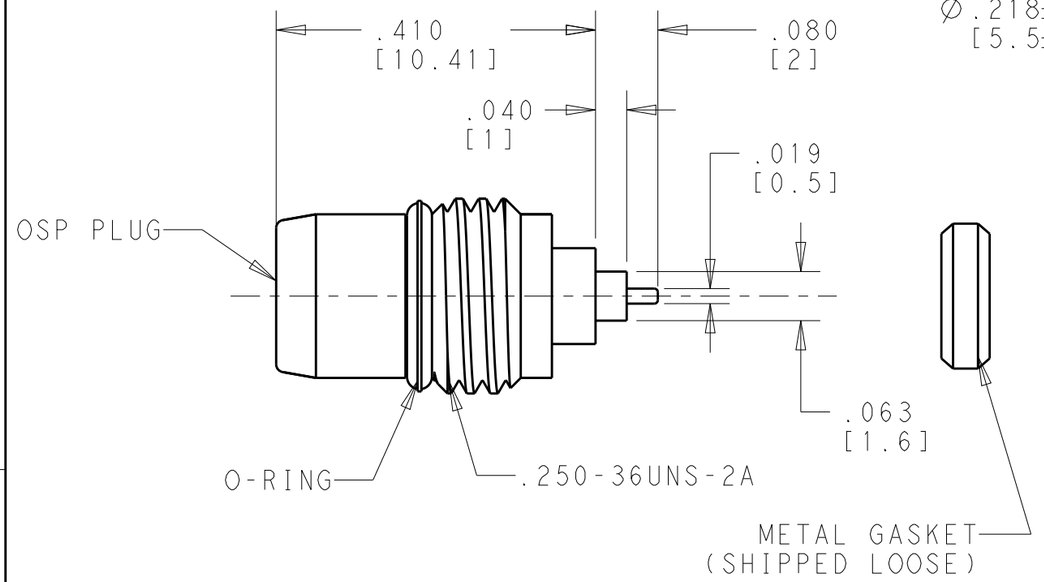

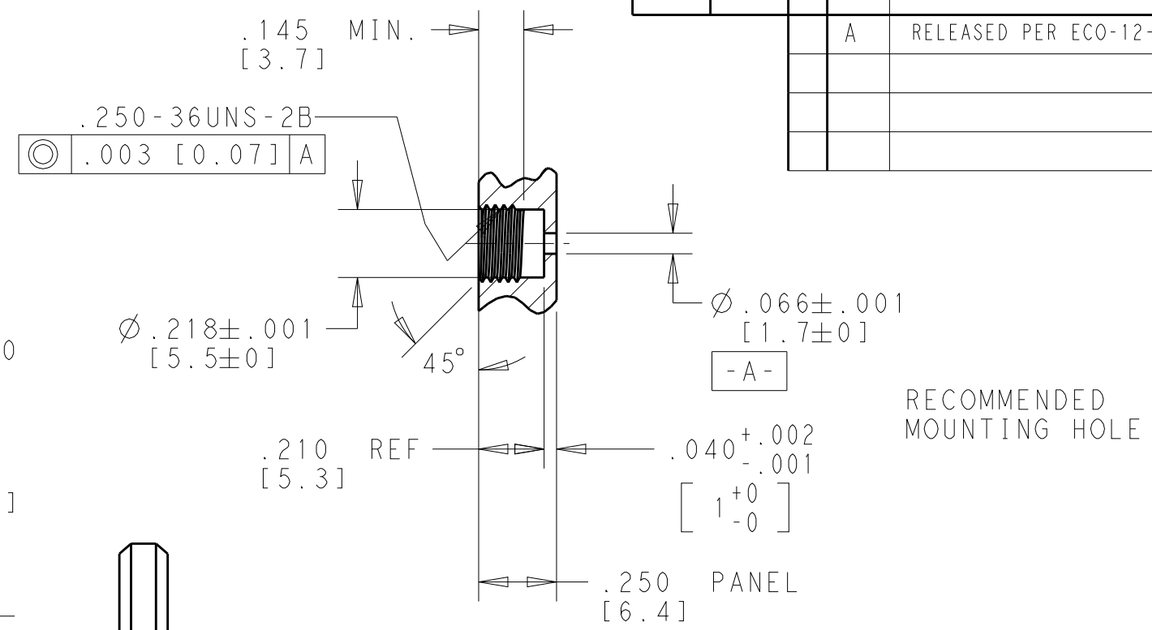

COMPONENT	MATERIAL	FINISH
HOUSING	STAINLESS STEEL PER ASTM-A484 AND ASTM A582, TYPE 303	PASSIVATE PER ASTM-A380
DIELECTRIC	TFE FLOUROCARBON PER ASTM-D-1457	N/A
CENTER CONTACT	BERYLLIUM COPPER PER ASTM-B-196 OR ASTM-B-197 ALLOY C17300, CONDITION H	GOLD PLATE PER MIL-G-45204
O-RING	FLOUROSILICONE PER MIL-R-25988, CLASS I, TYPE I	N/A
HERMETIC SEAL	GLASS BEAD	N/A
GASKET	SAE C12L14 STEEL	SILVER PLATE PER QQ-S-365

ELECTRICAL	
NOM. IMPEDANCE (OHMS)	50 ±1
Freq. Range (GHz)	DC to 18.0
Volt Rating (VRMS MAX)	
@ Sea Level	375
VSWR	1.04+.009f F(GHz)
Insertion Loss (db Max)	.05x SQRT.F(GHz)
RF Leakage (db MIN) (Interface Only, Fully Mated)	-(90-f(GHz))
Corona, 70,000Ft.(VRMS MIN)	335
Dielectric Withstanding Voltage (VRMS MIN)@ Sea Level	1000
Contact Resistance (Millohms MAX)	
Center Contact	6.0
Outer Contact	2.0
Cable to Housing	0.5
RF High Potential @ Sea Level (VRMS MIN @ 5MHz)	1000
IR (Megohms MIN)	5000

MECHANICAL	
Interface Dimensions	DESC SPEC B5072
Mating Characteristics:	
Insertion (MAX Lbs)	N/A
Withdrawal (MIN Oz)	N/A
Force to Engage (In-Lbs MAX)	N/A
Force To Disengage (Lbs MAX.)	N/A
Center Contact Captivation	
Axial (Lbs)	6.0
Radial (In-Oz)	
Weight (Grams)	1.4
HERMETIC SEAL	1 x 10e-8 cc/sec HELLUM at 1Atm

ENVIRONMENTAL	
TEMP. RATING	-65° TO +125°C
Vibration MIL-STD-202, Method 204, Condition D	
Shock MIL-STD-202, Method 213 Condition 1	
Thermal Shock ML-STD-202 Method 107,Condition B Except High Temp. 115°C	
Moisture Resistance MIL-STD-202 Method 106	
Corrosion - MIL-STD-202, Method 101, Condition B, 5% Salt Spray	

THIS DRAWING IS A CONTROLLED DOCUMENT. DIMENSIONING AND TOLERANCING PER ASME Y14.5M-2009

DIMENSIONS: INCHES

TOLERANCES UNLESS OTHERWISE SPECIFIED:

0 PLC	±-
1 PLC	±.1
2 PLC	±.02
3 PLC	±.005
4 PLC	±.0005
ANGLES	±-

MATERIAL -

FINISH -

DWN	RJM3	16AUG2012
CHK	W.MOYER	16AUG2012
APVD	W.MOYER	16AUG2012

PRODUCT SPEC -

APPLICATION SPEC -

WEIGHT -

TE Connectivity

NAME OSP PANEL FEEDTHRU PLUG RECEPTICLE HERMETICALLY SEALED

SIZE	CAGE CODE	DRAWING NO	RESTRICTED TO
A3	00779	C-2221418	-

Customer Drawing

SCALE 2:1 SHEET 1 OF 1 REV A

1470-19 (3/11)