THIS DRAWING IS UNPUBLISHED. RELEASED FOR PUBLICATION -
© COPYRIGHT - BY - ALL RIGHTS RESERVED.

LOC	DIST
-	-

REVISIONS

P	LTR	DESCRIPTION	DATE	DWN	APVD
	A	RELEASED PER ECO 12-013605	7-25-12	CT	WM

COMPONENT	MATERIAL	FINISH
HOUSING	STAINLESS STEEL PER ASTM-A484 AND ASTM A582, TYPE 303	PASSIVATE PER QQ-P-35
DIELECTRIC	TFE FLOUROCARBON PER ASTM-D-1457	N/A
CENTER CONTACT	BERYLLIUM COPPER PER ASTM-B-196 OR ASTM-B-197 ALLOY C17300, CONDITION H	GOLD PLATE PER ASTM-B-488
CONTACT SLEEVE	BERYLLIUM COPPER PER ASTM-B-194. ALLOY C17300, CONDITION H	GOLD PLATE PER ASTM-B-488
CONTACT RING	BERYLLIUM COPPER PER ASTM-B-194. ALLOY C17300, CONDITION H	GOLD PLATE PER ASTM-B-488

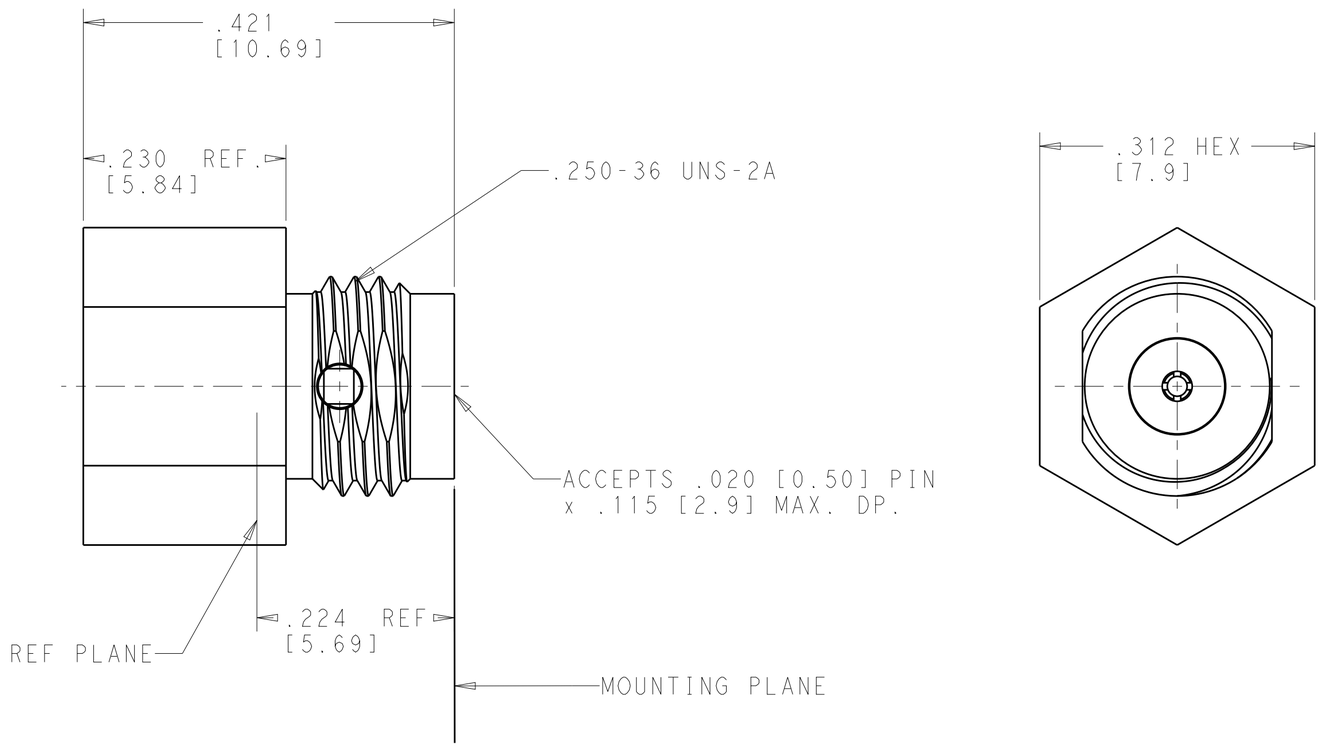

ELECTRICAL		MECHANICAL		ENVIRONMENTAL
NOM. IMPEDANCE (OHMS)	50 ±1			TEMP. RATING -65° TO +125°C
Freq. Range (GHz)	DC to 18.0	Interface Dimensions		Vibration MIL-STD-202, Method
Volt Rating (VRMS MAX)		MIL-STD-348A FIG. 321-2		204, Condition D, 20G's
@ Sea Level	335	Mating Characteristics:		Shock MIL-STD-202, Method 213
VSWR	1.04+.006f F(GHz)	Insertion (MAX Lbs)	N/A	Condition 1
		Withdrawal (MIN Oz)	N/A	Thermal Shock ML-STD-202 Method 107,Condition B Except High Temp. 115°C
Insertion Loss (db Max)	.03x SQRT.F(GHz)	Force to Engage (In-Lbs MAX)	3.0	
RF Leakage (db MIN) (Interface Only,		Force To Disengage (Lbs MAX.)	1.5	Moisture Resistance MIL-STD-202
Fully Mated)	-(90-f(GHz))	Center Contact Captivation		Method 106
Corona, 70,000Ft.(VRMS MIN)	85	Axial (Lbs)	6.0	Corrosion - MIL-STD-202, Method
Dielectric Withstanding Voltage		Radial (In-Oz)	4.0	101, Condition B, 5% Salt Spray
(VRMS MIN)@ Sea Level	1000	Weight (Grams)	1.91	Leak Test - MIL-STD-202, Method 112, Condition C, Procedure I 1 x 10e-8 CC/Sec.
Contact Resistance (Millohms MAX)				
Center Contact	3.0			
Outer Contact	2.0			
RF High Potential @ Sea Level				
(VRMS MIN @ 5MHz)	670			
IR (Megohms MIN)	5000			

2221309-1
PART NO.

THIS DRAWING IS A CONTROLLED DOCUMENT.

DIMENSIONS: INCHES[mm]

TOLERANCES UNLESS OTHERWISE SPECIFIED:
0 PLC ±-
1 PLC ±-
2 PLC ±-
3 PLC ±.005 [0.13]
4 PLC ±-
ANGLES ±-

MATERIAL: SEE TABLE
FINISH: SEE TABLE

DWN RJM3 13JUN2012
CHK W.MOYER 13JUN2012
APVD W.MOYER 13JUN2012
PRODUCT SPEC -
APPLICATION SPEC -
WEIGHT -

TE Connectivity

NAME: OSP, FIELD REPLACEABLE PANEL FEEDTHRU JACK
-

SIZE	CAGE CODE	DRAWING NO	RESTRICTED TO
A2	00779	C-2221309	-

Customer Drawing | SCALE 8:1 | SHEET 1 OF 1 | REV A

1471-9 (3/11)