© 2023 TE Connectivity. All Rights Reserved.

THE DRAWING SHOWS THE 2-DIMENSIONAL REFERENCE COMPONENT CONDITION OF THE ASSEMBLY TO IDENTIFY AND SPECIFY THE NECESSARY DIMENSIONS ONLY. THE DELIVERED PARTS MAY DEVIATE FROM THE DRAWING REGARDING THE ORIENTATION AND POSITION OF EACH COMPONENT (e.g. SLACK CABLE). SO FAR THE FUNCTIONALITY IS NOT CONCERNED.

DIE ZEICHNUNG ZEIGT DEN 2-DIMENSIONALEN IDEALZUSTAND DES ZUSAMMENBAUTEILS BEZUEGLICH DER KOMPONENTEN ZUR IDENTIFIKATION UND SPEZIFIKATION DER NOTWENDIGEN DIMENSIONEN. HINSICHTLICH DER ORIENTIERUNG UND DER LAGE DER KOMPONENTEN (z.B. BIEGESCHLAFFES KABEL) KOENNEN DIE GELIEFERTEN TEILE VON DER ZEICHNUNG ABWEICHEN. SOFERN DIE FUNKTIONALITAET NICHT BEEINTRAECHTIGT IST.

REVISIONS

| P | LTR | DESCRIPTION | DATE | DWN | APVD |
|---|---|---|---|---|---|
| | B5 | NEW VARIANT (2- -7) ADDED | 30MAY2023 | DS | MKV |
| | C | NEW PARTS REVISION | 31AUG2023 | DS | MKV |
| | C1 | DRAFTING CORRECTION | 27SEP2023 | DS | MKV |
| | | | | | |

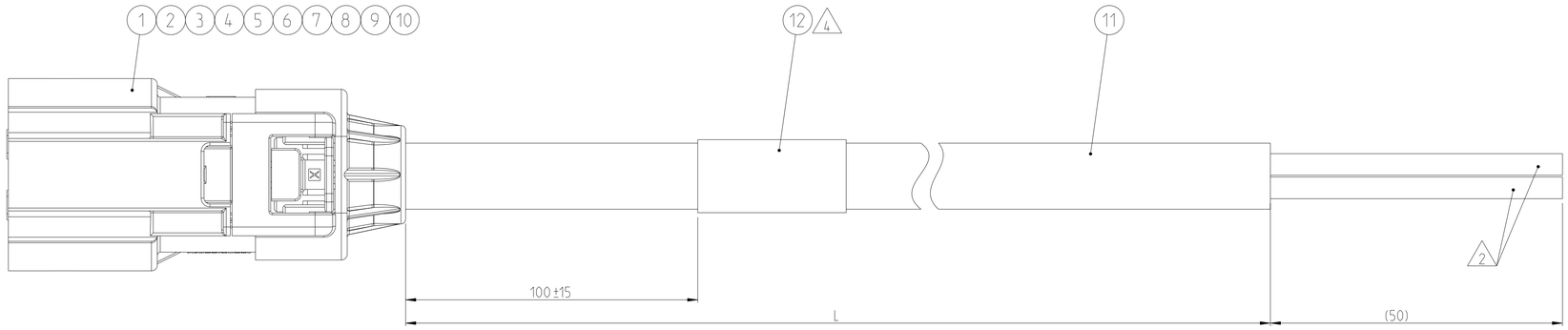


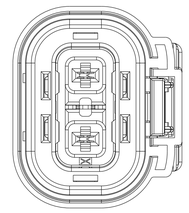

**WIRING SCHEDULE:**
**Belegungsplan:**

| CAVITY-NO. | WIRE COLOUR |
|---|---|
| 1 | red (rot) |
| 2 | black (schwarz) |

**LENGTH SCHEDULE:**
**Laengentabelle:**

| TE PART NO. | REV. | LENGTH L (mm) | TOL. (mm) | CODING |
|---|---|---|---|---|
| 1-2208103-0 | C | 500 | +30 | A |
| 1-2208103-1 | C | 1000 | +30 | |
| 1-2208103-2 | C | 2000 | +35 | |
| 1-2208103-3 | C | 3000 | +40 | |
| 1-2208103-4 | C | 4000 | +50 | |
| 1-2208103-5 | C | 5000 | +60 | |
| 1-2208103-6 | B | 6000 | +65 | |
| 1-2208103-7 | B | 7000 | +65 | |
| 1-2208103-8 | B | 8000 | +70 | |
| 2-2208103-0 | C | 500 | +30 | B |
| 2-2208103-1 | C | 1000 | +30 | |
| 2-2208103-2 | C | 2000 | +35 | |
| 2-2208103-3 | C | 3000 | +40 | |
| 2-2208103-4 | C | 4000 | +50 | |
| 2-2208103-5 | C | 5000 | +60 | |
| 2-2208103-6 | B | 6000 | +65 | |
| 2-2208103-7 | B | 8000 | +70 | |
| 4-2208103-0 | C | 500 | +30 | D |
| 4-2208103-1 | C | 1000 | +30 | |
| 4-2208103-2 | C | 2000 | +35 | |
| 4-2208103-3 | C | 3000 | +40 | |
| 4-2208103-4 | C | 4000 | +50 | |
| 4-2208103-5 | C | 5000 | +60 | |
| 4-2208103-6 | B | 6000 | +70 | |
| 5-2208103-0 | C | 500 | +30 | E |
| 5-2208103-1 | C | 1000 | +30 | |
| 5-2208103-2 | C | 2000 | +35 | |
| 5-2208103-3 | C | 3000 | +40 | |
| 5-2208103-4 | C | 4000 | +50 | |
| 5-2208103-5 | C | 5000 | +60 | |
| 6-2208103-0 | C | 500 | +30 | F |
| 6-2208103-1 | C | 1000 | +30 | |
| 6-2208103-2 | C | 2000 | +35 | |
| 6-2208103-3 | C | 3000 | +40 | |
| 6-2208103-4 | C | 4000 | +50 | |
| 6-2208103-5 | C | 5000 | +60 | |

4 **LABEL LEGEND:**
**Label Beschriftung:**

TE
TE PN: X-2208103-Y Rev. __
DD/MM/YY
2.7 kV DC TEST PASSED

CURRENT REV.
Aktuelle Rev.

DATE CODE
Datum

**NOTES**

1 PACKAGING:
ASSEMBLIES PACKED IN TE STANDARD BOXES
ACC. TO TE SPECIFICATION 107-18087, 107-18064.
DAMAGED TO BE AVOIDED.

2 ELECTRICAL TEST ACCORDING TE SPECIFICATION 108-18857, CHAPTER 3.3.
USE CURRENT REVISION ALWAYS.
STRIPPED ONLY OUTER JACKET, FOIL AND BRAID.

3 TE PRODUCT SPECIFICATION:
108-18513 (MCP 2.8)

4 MANUFACTURING CODE:
TE PART NO., CURRENT REV. LEVEL AND DATE CODE (DD.MM.YY),
TO BE PRINTED ON LABEL (ITEM 12).
LABEL TO BE APPLIED TO THE CABLE AFTER SUCCESSFUL ELECTRICAL TEST.

| QTY 6- -5 | QTY 6- -4 | QTY 6- -3 | QTY 6- -2 | QTY 6- -1 | QTY 6- -0 | QTY 5- -5 | QTY 5- -4 | QTY 5- -3 | QTY 5- -2 | QTY 5- -1 | QTY 5- -0 | QTY 4- -6 | QTY 4- -5 | QTY 4- -4 | QTY 4- -3 | QTY 4- -2 | QTY 4- -1 | QTY 4- -0 | QTY 2- -7 | QTY 2- -6 | QTY 2- -5 | QTY 2- -4 | QTY 2- -3 | QTY 2- -2 | QTY 2- -1 | QTY 2- -0 | QTY 1- -8 | QTY 1- -7 | QTY 1- -6 | QTY 1- -5 | QTY 1- -4 | QTY 1- -3 | QTY 1- -2 | QTY 1- -1 | QTY 1- -0 | DESCRIPTION | ITEM NO. |
|---|---|---|---|---|---|---|---|---|---|---|---|---|---|---|---|---|---|---|---|---|---|---|---|---|---|---|---|---|---|---|---|---|---|---|---|---|---|
| 1 | 1 | 1 | 1 | 1 | 1 | 1 | 1 | 1 | 1 | 1 | 1 | 1 | 1 | 1 | 1 | 1 | 1 | 1 | 1 | 1 | 1 | 1 | 1 | 1 | 1 | 1 | 1 | 1 | 1 | 1 | 1 | 1 | 1 | 1 | 1 | LABEL, HELL, TYP 323, 25.4 x 95.25 mm | 12 |
| - mm | - mm | - mm | - mm | - mm | - mm | - mm | - mm | - mm | - mm | - mm | - mm | - mm | - mm | - mm | - mm | - mm | - mm | - mm | - mm | - mm | - mm | - mm | - mm | - mm | - mm | - mm | - mm | - mm | - mm | - mm | - mm | - mm | - mm | - mm | - mm | POWER CABLE, 2 x 4 qmm | 11 |
| 1 | 1 | 1 | 1 | 1 | 1 | 1 | 1 | 1 | 1 | 1 | 1 | 1 | 1 | 1 | 1 | 1 | 1 | 1 | 1 | 1 | 1 | 1 | 1 | 1 | 1 | 1 | 1 | 1 | 1 | 1 | 1 | 1 | 1 | 1 | 1 | CABLE SEAL RETAINER, SIZE A, HVA280-2PHM | 10 |
| 1 | 1 | 1 | 1 | 1 | 1 | 1 | 1 | 1 | 1 | 1 | 1 | 1 | 1 | 1 | 1 | 1 | 1 | 1 | 1 | 1 | 1 | 1 | 1 | 1 | 1 | 1 | 1 | 1 | 1 | 1 | 1 | 1 | 1 | 1 | 1 | COLLET, SIZE A, HVA280-2PHM | 9 |
| 1 | 1 | 1 | 1 | 1 | 1 | 1 | 1 | 1 | 1 | 1 | 1 | 1 | 1 | 1 | 1 | 1 | 1 | 1 | 1 | 1 | 1 | 1 | 1 | 1 | 1 | 1 | 1 | 1 | 1 | 1 | 1 | 1 | 1 | 1 | 1 | CABLE SEAL, SIZE A, HVA280-2PHM | 8 |
| 1 | 1 | 1 | 1 | 1 | 1 | 1 | 1 | 1 | 1 | 1 | 1 | 1 | 1 | 1 | 1 | 1 | 1 | 1 | 1 | 1 | 1 | 1 | 1 | 1 | 1 | 1 | 1 | 1 | 1 | 1 | 1 | 1 | 1 | 1 | 1 | SPACER, HVA280-2PHM | 7 |
| 1 | 1 | 1 | 1 | 1 | 1 | 1 | 1 | 1 | 1 | 1 | 1 | 1 | 1 | 1 | 1 | 1 | 1 | 1 | 1 | 1 | 1 | 1 | 1 | 1 | 1 | 1 | 1 | 1 | 1 | 1 | 1 | 1 | 1 | 1 | 1 | OUTER FERRULE, SIZE C, HVA280 | 6 |
| 1 | 1 | 1 | 1 | 1 | 1 | 1 | 1 | 1 | 1 | 1 | 1 | 1 | 1 | 1 | 1 | 1 | 1 | 1 | 1 | 1 | 1 | 1 | 1 | 1 | 1 | 1 | 1 | 1 | 1 | 1 | 1 | 1 | 1 | 1 | 1 | INNER FERRULE, SIZE C, HVA280 | 5 |
| 2 | 2 | 2 | 2 | 2 | 2 | 2 | 2 | 2 | 2 | 2 | 2 | 2 | 2 | 2 | 2 | 2 | 2 | 2 | 2 | 2 | 2 | 2 | 2 | 2 | 2 | 2 | 2 | 2 | 2 | 2 | 2 | 2 | 2 | 2 | 2 | SHIELD, PLUG, HVA280-2PHM | 4 |
| 2 | 2 | 2 | 2 | 2 | 2 | 2 | 2 | 2 | 2 | 2 | 2 | 2 | 2 | 2 | 2 | 2 | 2 | 2 | 2 | 2 | 2 | 2 | 2 | 2 | 2 | 2 | 2 | 2 | 2 | 2 | 2 | 2 | 2 | 2 | 2 | MCP-2.8 TERMINAL FEMALE | 3 |
| 1 | 1 | 1 | 1 | 1 | 1 | 1 | 1 | 1 | 1 | 1 | 1 | 1 | 1 | 1 | 1 | 1 | 1 | 1 | 1 | 1 | 1 | 1 | 1 | 1 | 1 | 1 | 1 | 1 | 1 | 1 | 1 | 1 | 1 | 1 | 1 | INNER HSG SUBASSY, HVA280-2PHM, SHUNTED | 2 |
| 1 | 1 | 1 | 1 | 1 | 1 | - | - | - | - | - | - | - | - | - | - | - | - | - | - | - | - | - | - | - | - | - | - | - | - | - | - | - | - | - | - | PLUG SUBASSY, HVA280-2PHM, KEY F | 1 |
| - | - | - | - | - | - | 1 | 1 | 1 | 1 | 1 | 1 | - | - | - | - | - | - | - | - | - | - | - | - | - | - | - | - | - | - | - | - | - | - | - | - | PLUG SUBASSY, HVA280-2PHM, KEY E | |
| - | - | - | - | - | - | - | - | - | - | - | - | 1 | 1 | 1 | 1 | 1 | 1 | 1 | - | - | - | - | - | - | - | - | - | - | - | - | - | - | - | - | - | PLUG SUBASSY, HVA280-2PHM, KEY D | |
| - | - | - | - | - | - | - | - | - | - | - | - | - | - | - | - | - | - | - | 1 | 1 | 1 | 1 | 1 | 1 | 1 | 1 | - | - | - | - | - | - | - | - | - | PLUG SUBASSY, HVA280-2PHM, KEY B | |
| - | - | - | - | - | - | - | - | - | - | - | - | - | - | - | - | - | - | - | - | - | - | - | - | - | - | - | 1 | 1 | 1 | 1 | 1 | 1 | 1 | 1 | 1 | PLUG SUBASSY, HVA280-2PHM, KEY A | |
| - | - | - | - | - | - | - | - | - | - | - | - | - | - | - | - | - | - | - | - | - | - | - | - | - | - | - | - | - | - | - | - | - | - | - | - | WEIGHT OF ASSY NO. (g) | |

C1

THIS DRAWING IS A CONTROLLED DOCUMENT.
DIMENSIONING AND TOLERANCING PER GPS (ISO STANDARDS).

DIESE ZEICHNUNG IST EIN KONTROLLIERTES DOKUMENT.
BEMASSUNGEN UND TOLERANZEN GEMAESS GPS (ISO STANDARDS).

TOLERANCING ISO 8015
TOLERIERUNG ISO 8015

DIMENSIONS: mm

TOLERANCES UNLESS OTHERWISE SPECIFIED:
0 PLC ±
1 PLC ±
2 PLC ±
3 PLC ±
4 PLC ±
ANGLES ±

MATERIAL -
FINISH -

DWN M. Zelch 24APR2012
CHK J. Bernstorf 24APR2012
APVD M. Folk 26APR2012

1- -0 AS SHOWN
wie dargestellt

TE Connectivity

NAME 2 POS. HVA, 2 PHM, SHUNTED, HYB ASSY
PRODUCT SPEC -
APPLICATION SPEC -
WEIGHT -

SIZE A1 | CAGE CODE 00779 | DRAWING NO C-2208103 | RESTRICTED TO -

CUSTOMER DRAWING | SCALE 2:1 | SHEET 1 OF 1 | REV C1

4805 (3/13)