THIS DRAWING IS UNPUBLISHED. RELEASED FOR PUBLICATION -
© COPYRIGHT - - ALL RIGHTS RESERVED.

LOC	DIST
IR	-

REVISIONS

P	LTR	DESCRIPTION	DATE	DWN	APVD
	A	FIRST RELEASE	25SEP2012	GG	RRP

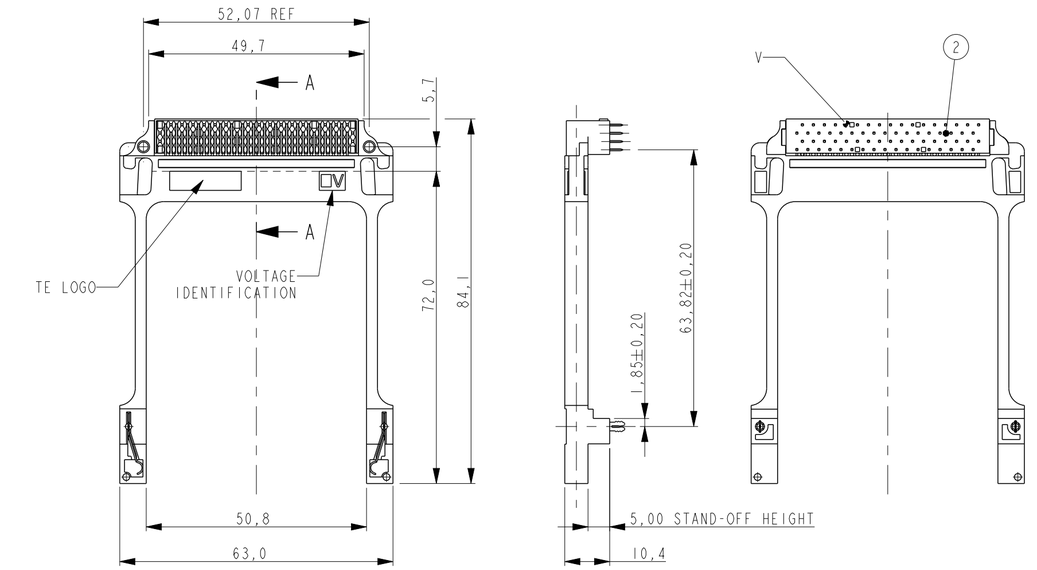

PN 2178366-3 (WITH BOARD LOCK) AS SHOWN

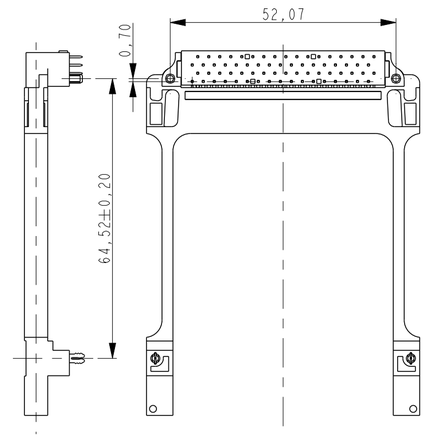

NOTES/SPECIFICATION:

1 HEADER ACCEPTS TYPES I, II, & III OF PCMCIA STANDARD MEMORY CARD

2 MECHANICAL,ELECTRICAL,ENVIRONMENTAL SPECIFICATIONS : CONFIRMS TO PRODUCT REQUIRMENTS AS PER SPECIFICATION 108-19201.

3 LENGTH OF CONTACTS:

DIM "A"	POSITION No.
5	1,17,34,35,51,68
3.5	36,67
4.25	THE OTHERS

4 PLATING OF CONTACT: Ni : OVERALL
Au : CARD MATING SIDE
TIN: PCB SIDE

5 ALL PARTS PACKAGED IN TRAYS UNLESS REQUESTED:

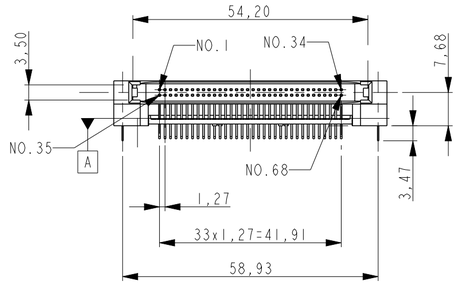

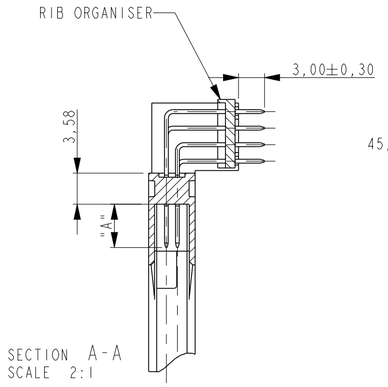

SECTION A-A
SCALE 2:1

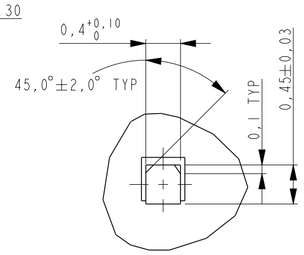

SCALE 20:1
DETAIL V

CONNECTOR TO PRINTED CIRCUIT BOARD ASSEMBLY:

1. PLACE THE CONNECTOR ON THE PRINTED CIRCUIT BOARD.
THE SOLDER TAILS, RETENT CLIPS SHOULD BE SEATED IN THE RESPECTIVE HOLES.

2. PUSH FIRMELY DOWN ON CENTER OF THE HOUSING THEN SOLDER RETENTS.
A SLIGHT SNAP IS FELT WHEN THE CONTACT IS FULLY SEATED.

3. SOLDER PROCESS ENTIRE PRINTED CIRCUIT BOARD ASSEMBLY.

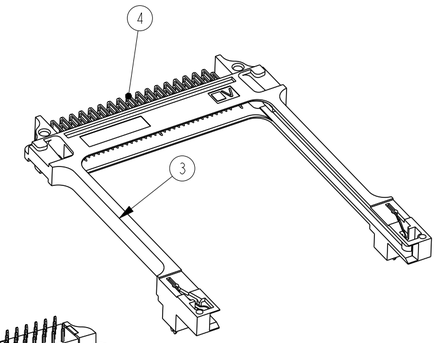

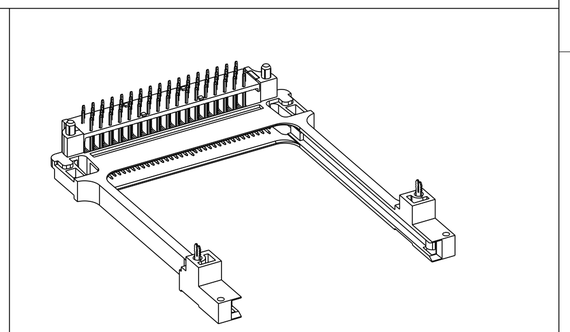

PN 2178366-3 & -4 (WITH BOARD LOCK) AS SHOWN

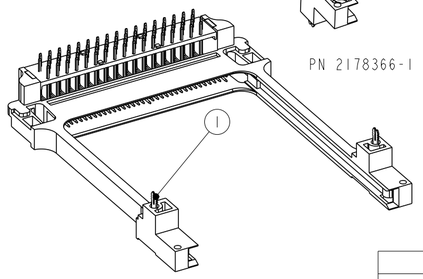

PN 2178366-1 & -2 (WITHOUT BOARD LOCK) AS SHOWN

2178366-4	3.3V	WITH BOARD LOCK
2178366-3	5V	
2178366-2	3.3V	WITHOUT BOARD LOCK
2178366-1	5V	
TE PN.	VOLTAGE IDENTIFICATION	BOARD LOCK TYPE

RECOMMENDED PCB LAYOUT FOR BOARD LOCK
(THICKNESS: 1,60mm ±0,1mm)

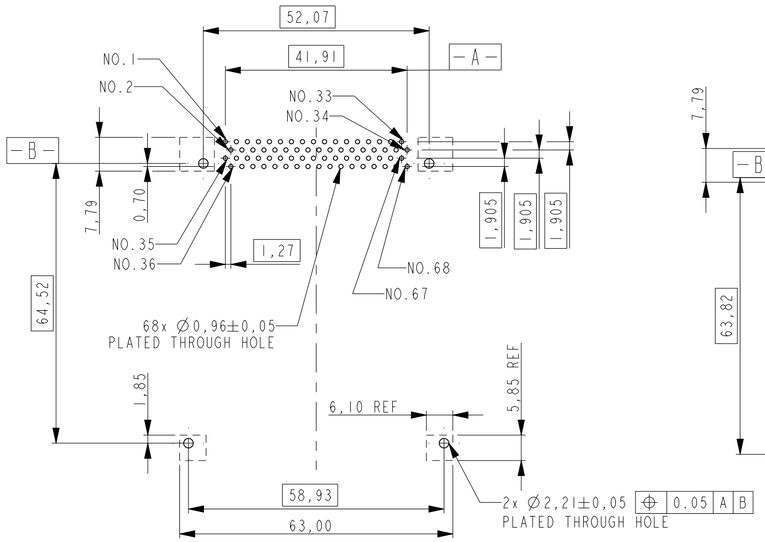

RECOMMENDED PCB LAYOUT FOR WITHOUT BOARD LOCK
(THICKNESS: 1,60mm ±0,1mm)

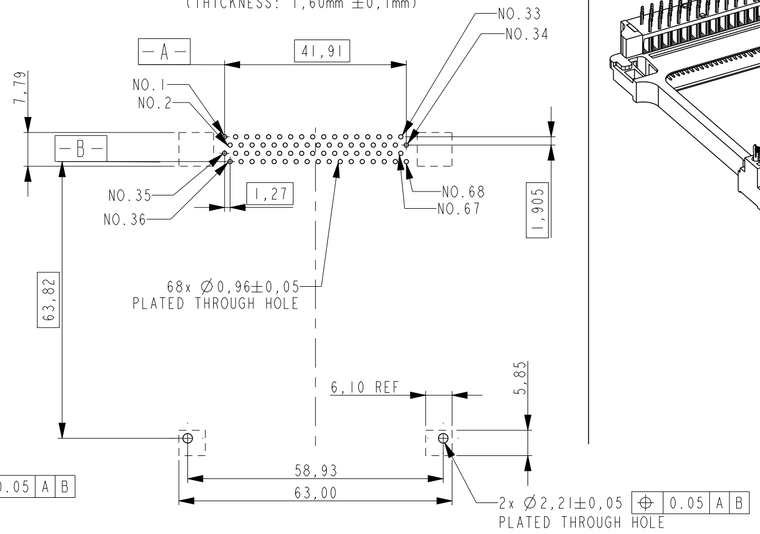

ITEM NO	QTY	DESCRIPTION	MATERIAL	FINISH
4	68	CONTACT	COPPER ALLOY	4
3	1	HOUSING	THERMO PLASTIC UL 94 VO	COLOR: BLACK
2	1	ORGANISER	THERMO PLASTIC UL 94 VO	COLOR: BLACK
1	2	GROUND CONTACT	PHOSPHOR BRONZE	TIN: 2µm MIN

THIS DRAWING IS A CONTROLLED DOCUMENT.

DIMENSIONS: mm

TOLERANCES UNLESS OTHERWISE SPECIFIED:
0 PLC ±0.2
1 PLC ±0.15
2 PLC ±0.05
3 PLC ±-
4 PLC ±-
ANGLES ±-

MATERIAL: SEE TABLE

FINISH: 6

DWN	GUNA	07-MAY-2012
CHK	GUNA	07-MAY-2012
APVD	RAJENDRA	07-MAY-2012
PRODUCT SPEC	108-19201	
APPLICATION SPEC	-	
WEIGHT	-	

TE Connectivity

NAME: PC CARD HEADER HIGH RAISED 5mm WITH AND WITHOUT BOARD LOCK

SIZE	CAGE CODE	DRAWING NO	RESTRICTED TO
A2	00779	C-2178366	-

CUSTOMER DRAWING | SCALE - | SHEET 1 OF 1 | REV A