© – TE Connectivity. All Rights Reserved.

REVISIONS					
P	LTR	DESCRIPTION	DATE	DWN	APVD
	F2	REVISED AS PER	10SEP2024	MK	GC

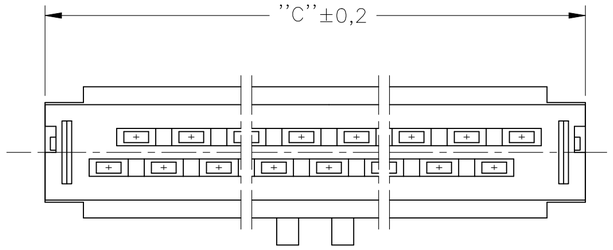

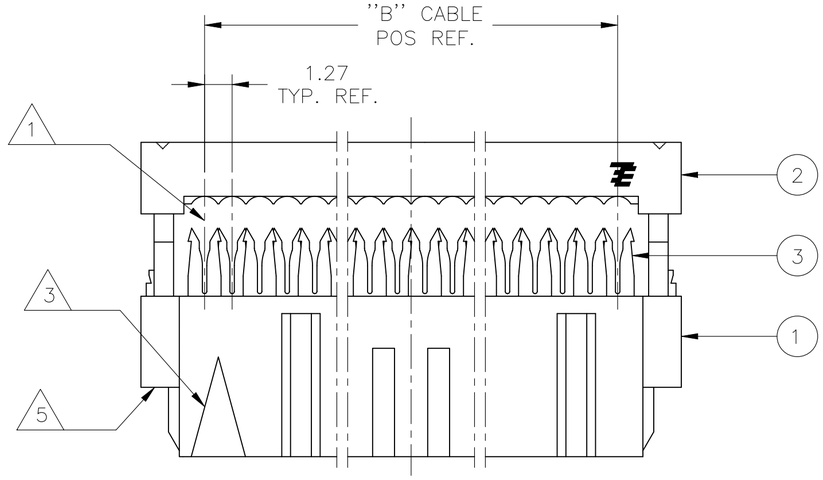

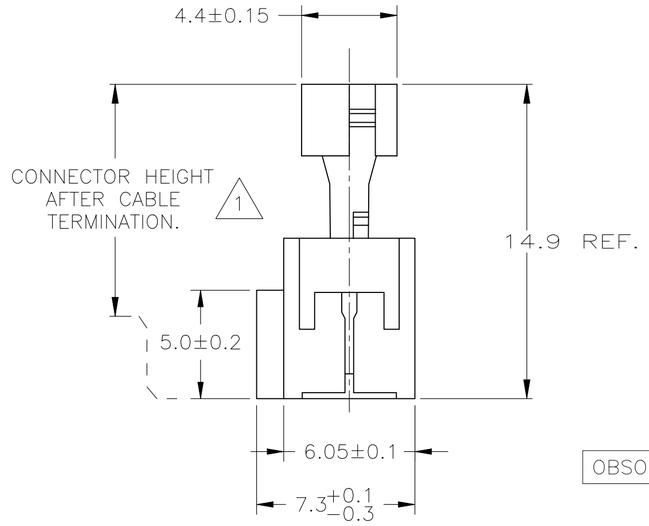

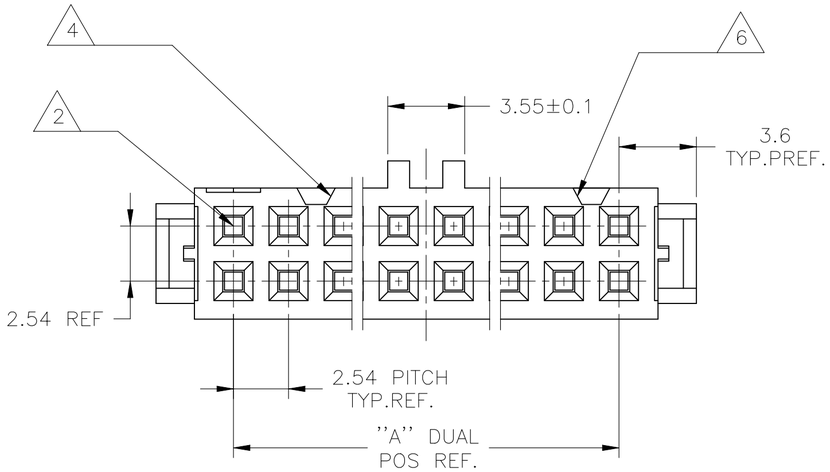

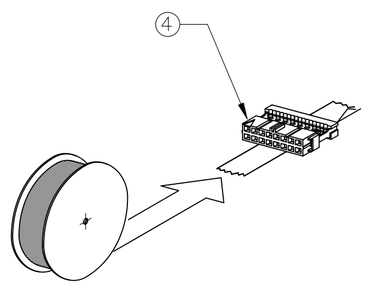

1. CONNECTOR IS DESIGNED FOR FLAT RIBBON CABLE ON 1.27 CENTERS. FOR CABLE REQUIREMENTS SEE TE APPLICATION SPECIFICATION 114–19022.
2. THESE RECEPTACLE CONNECTORS MATE WITH 0.64±0.05mm SQUARE OR ROUND POSTS ON 2.54mm GRID.
3. MARK INDICATING FIRST CABLE POSITION REFERRING TO CONTACT POSITION.
4. THERE IS NO POLARIZATION–SLOT AT THIS END IN 6, 10 AND 14 POS CONNECTORS.
5. THESE CONNECTORS CAN BE USED IN CONJUNCTION WITH STRAIN–RELIEF COVERS OF PARTNR: 100103.
6. THERE IS NO POLARIZATION–SLOT AT THIS END IN 6 POS CONNECTORS.
7. PRODUCT SPECIFICATION 108–19033.

3 RECEPTACLE CONTACT	PHOSPHORBRONZE Cu Sn6	AT CONTACT–PLACE: 0.75μ GOLD/PDNI AT WIRING END: 2,5μ TIN ENTIRE UNDERCOATING:1,27μ NICKEL
2 COVER 1 HOUSING	THERMOPLASTIC POLYESTER GF UL 94 –V0	BLACK BK015 ONLY FOR REF.
COMPONENT NAME	MATERIAL	PLATING / COLOUR

	QUANTITY PER REEL	DIM."C"	"B" CABLE POS.	"A" DUAL POS.	PARTNUMBER 4	PART REV.
	500	85,9	64	32	6–215915–4	D
	500	80,8	60	30	6–215915–0	D
	500	68,1	50	25	5–215915–0	D
OBSOLETE	~~1500~~	~~60,5~~	~~44~~	~~22~~	~~4–215915–4~~	D
	750	55,4	40	20	4–215915–0	D
	1500	47,8	34	17	3–215915–4	D
OBSOLETE	~~1500~~	~~42,7~~	~~30~~	~~15~~	~~3–215915–0~~	D
	1500	37,6	26	13	2–215915–6	D
	1500	30,0	20	10	2–215915–0	D
	1500	24,9	16	8	1–215915–6	D
	1500	22,4	14	7	1–215915–4	D
	1500	17,3	10	5	1–215915–0	D
OBSOLETE	~~1500~~	~~14,8~~	~~8~~	~~4~~	~~0–215915–8~~	B
	1500	12,2	6	3	0–215915–6	D
OBSOLETE	~~1500~~	~~9,7~~	~~4~~	~~2~~	~~0–215915–4~~	B

215915

THIS DRAWING IS A CONTROLLED DOCUMENT.

DIMENSIONS: mm

TOLERANCES UNLESS OTHERWISE SPECIFIED:
0 PLC ± –
1 PLC ± –
2 PLC ± –
3 PLC ± –
4 PLC ± –
ANGLES ± –

MATERIAL –
FINISH –

DWN R.HOGEVEEN 02–02–88
CHK R.VERSTIJNEN 03–02–88
APVD L.V.SOEST 03–02–88
PRODUCT SPEC —
APPLICATION SPEC —
WEIGHT 0.000000
CUSTOMER DRAWING

TE Connectivity

NAME AMP–LATCH MIL–TYPE RECEPT. CONN. ASS'Y 14,9 PRE–ASSEMBLED 4

SIZE A2 | CAGE CODE 00779 | DRAWING NO C–215915 | RESTRICTED TO —

SCALE 5:1 | SHEET 1 OF 1 | REV F2

1471–9 (1/15)