© 2022 TE connectivity AG (Corporation) (Germany) Gesellschaft mit beschränkter Haftung
FREI FUER VEROEFFENTLICHUNG
ALLE RECHTE VORBEHALTEN.

MATED WITH:
PASSEND ZU:

PROJEKT NR.:
PRJ-13-000000345

REVISIONS
ÄNDERUNGEN

P	LTR	DESCRIPTION BESCHREIBUNG	DATE	DWN	APVD
	D	SEE BALLOON D	03MAR2015	AHM	FWI
	E	SEE BALLOON E	26NOV2015	RSC	FWI
	F	SEE BALLOON F	14NOV2016	RSC	KKI
	G	UPDATED WITH MODIFIED PLUG HSG AND LEVER DESIGN	21NOV2024	JJH	KPY

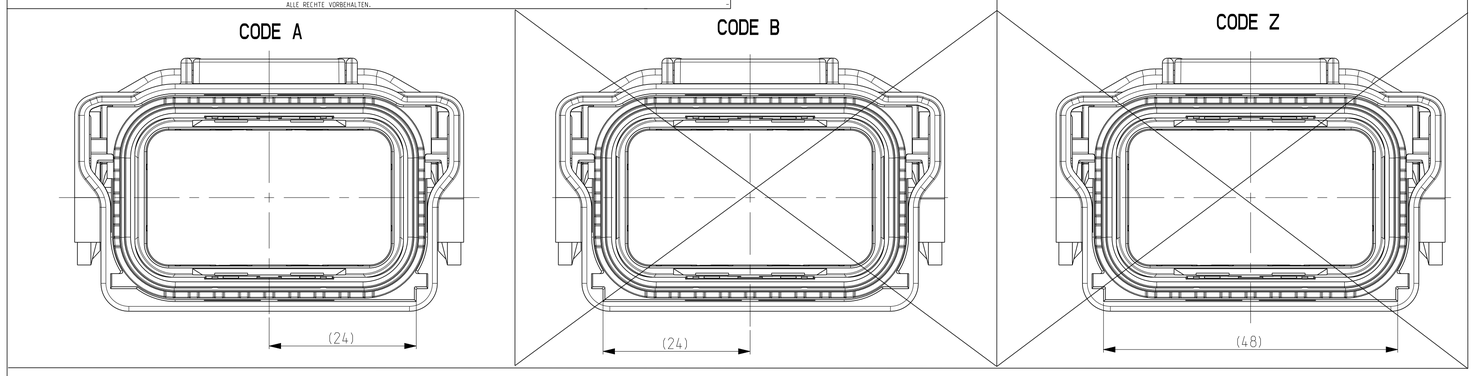

1 IN CASE OF DISCREPANCIES BETWEEN GERMAN AND ENGLISH TEXT THE ENGLISH TEXT IS BINDING
Im Falle von Unterschieden zwischen dem deutschen und dem englischen Text ist der englischen Text verbindlich

4 LAYER PACKING WITH CORRUGATED CARDBOARD INTO CARTON ACCORDING SPEC 107-18032
Lagenweise Verpackung mit Wellpappeinlagen in Karton gemaess Spec. 107-18032

5 DELIVERY CONDITION AS SHOWN.
SECONDARY LOCK IN PRELOCK POSITION
PULL-OFF FORCE min. 20N
Lieferzustand wie dargestellt. Kontaktgehaeusesicherung in Vorrastellung
Rueckhaltekraft min. 20N

6 DELIVERY CONDITION AS SHOWN.
CPA IN ENDLOCK POSITION
Lieferzustand wie dargestellt. Positionssicherung in Endrastellung

7 DELIVERY CONDITION AS SHOWN. SEALING IN CORRECT ORIENTATION
Lieferzustand wie dargestellt. Dichtung in korrekter Orientierung

8 TE PART NUMBER ASSEMBLY
TE-Teilenummer Baugruppe

9 LEVER IN CORRECT COLOR ACCORDING TO CODING OF CONNECTOR
Hebelfarbe entsprechend der Steckercodierung

10 MAX. ROTATION OF SEAL AROUND CENTERLINE ±2mm
Max. Verdrehung der Dichtung um Steckerachse ±2mm

NOTE Bem.	FEATURE Merkmal	TE - No.
11	MATING PIN HEADER BY TE CONNECTIVITY Passende Stiftwanne von TE Connectivity	2141619 / 2236454
12	PRODUCT-SPEC. Produkt-Spez.	108-94235
13	APPLICATION.-SPEC Verarbeitungs-Spez.	114-94114

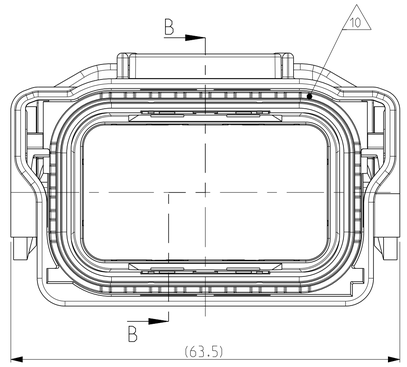

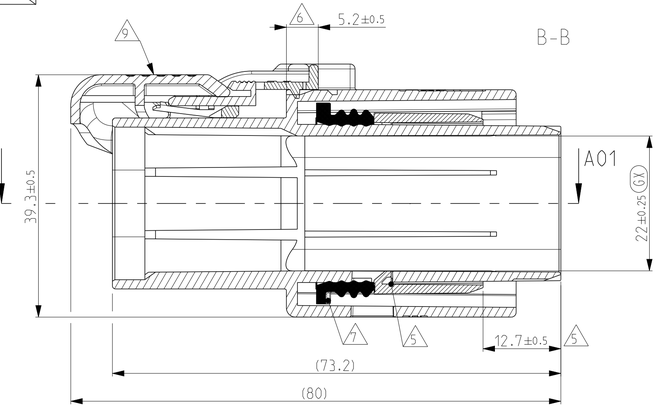

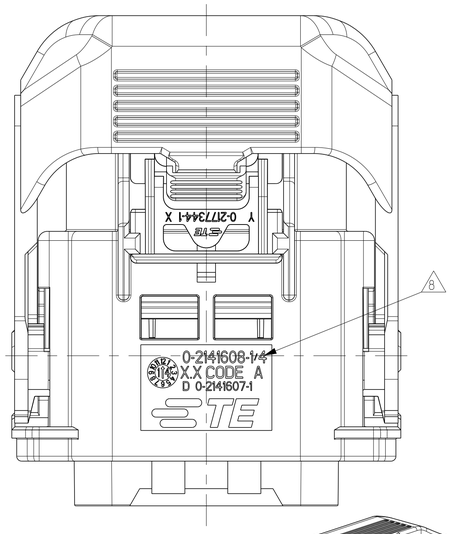

A01-A01

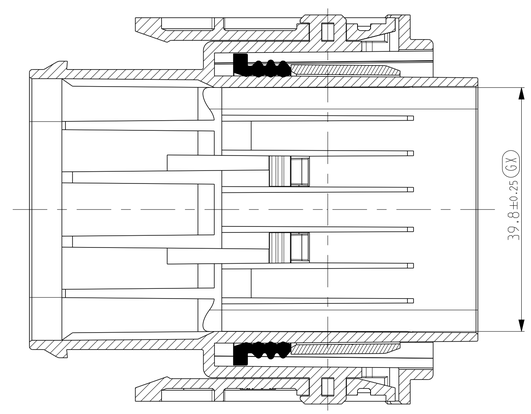

G

CODE	DESCRIPTION - ASSY	WEIGHT (g)	TE ORDER-NO.	REV	QTY	DESCRIPTION - PART	MATERIAL	MAX. REGRIND ALLOWED	COLOUR	ITEM
Z	5POS. RECEPTACLE HSG. ASSY. WITH CPA	54.98	2141608-6	F	1	CPA	PA6-(GF+GB)30		RED	5
					1	LEVER, 5POS schwarz / BLACK	PA66-GF30		WATER BLUE	4
					1	SECONDARY LOCK HV CONNECTOR 5 POS	PA6-(GF+GB)30		BLACK	3
					1	RADIAL SEAL HV CONNECTOR 5 POS	SILICON RUBBER		NATURAL	2
					1	OUTER HOUSING HV CONNECTOR 5 POS CODE Z	PA66-GF30		ORANGE	1
B	5POS. RECEPTACLE HSG. ASSY. WITH CPA	54.98	2141608-5	F	1	CPA	PA6-(GF+GB)30		RED	5
					1	LEVER, 5POS schwarz / BLACK	PA66-GF30		WHITE	4
					1	SECONDARY LOCK HV CONNECTOR 5 POS	PA6-(GF+GB)30		BLACK	3
					1	RADIAL SEAL HV CONNECTOR 5 POS	SILICON RUBBER		NATURAL	2
					1	OUTER HOUSING HV CONNECTOR 5 POS CODE B	PA66-GF30		ORANGE	1
A	5POS. RECEPTACLE HSG. ASSY. WITH CPA	54.98	2141608-4	G	1	CPA	PA6-(GF+GB)30	25%	RED	5
					1	LEVER, 5POS schwarz / BLACK	PA66-GF30	20%	BLACK	4
					1	SECONDARY LOCK HV CONNECTOR 5 POS	PA6-(GF+GB)30	25%	BLACK	3
					1	RADIAL SEAL HV CONNECTOR 5 POS	SILICON RUBBER	0%	NATURAL	2
					1	OUTER HOUSING HV CONNECTOR 5 POS CODE A	PA66-GF30	20%	ORANGE	1
Z	5POS. RECEPTACLE HSG. ASSY. WITHOUT CPA	54	2141608-3	E	1	LEVER, 5POS schwarz / BLACK	PA66-GF30		WATER BLUE	4
					1	SECONDARY LOCK HV CONNECTOR 5 POS	PA6-(GF+GB)30		BLACK	3
					1	RADIAL SEAL HV CONNECTOR 5 POS	SILICON RUBBER		NATURAL	2
					1	OUTER HOUSING HV CONNECTOR 5 POS CODE Z	PA66-GF30		ORANGE	1
B	5POS. RECEPTACLE HSG. ASSY. WITHOUT CPA	54	2141608-2	E	1	LEVER, 5POS schwarz / BLACK	PA66-GF30		WHITE	4
					1	SECONDARY LOCK HV CONNECTOR 5 POS	PA6-(GF+GB)30		BLACK	3
					1	RADIAL SEAL HV CONNECTOR 5 POS	SILICON RUBBER		NATURAL	2
					1	OUTER HOUSING HV CONNECTOR 5 POS CODE B	PA66-GF30		ORANGE	1
A	5POS. RECEPTACLE HSG. ASSY. WITHOUT CPA	54	2141608-1	F	1	LEVER, 5POS schwarz / BLACK	PA66-GF30	20%	BLACK	4
					1	SECONDARY LOCK HV CONNECTOR 5 POS	PA6-(GF+GB)30	25%	BLACK	3
					1	RADIAL SEAL HV CONNECTOR 5 POS	SILICON RUBBER	0%	NATURAL	2
					1	OUTER HOUSING HV CONNECTOR 5 POS CODE A	PA66-GF30	20%	ORANGE	1

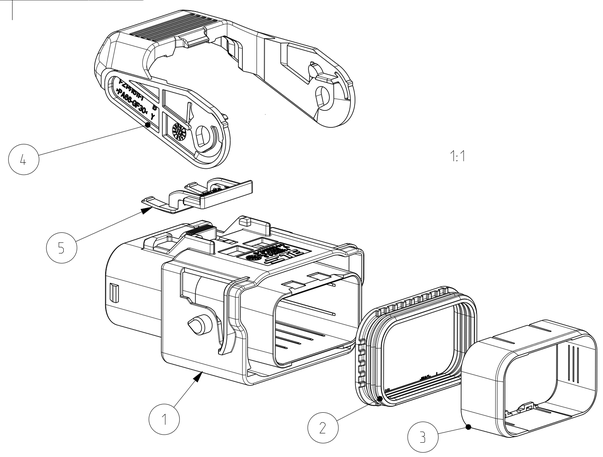

1:1

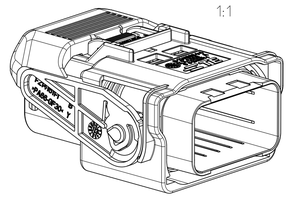

1:1

PN 2141608-4
AS SHOWN

DIESE ZEICHNUNG IST EIN KONTROLLIERTES DOKUMENT.
BEMASSUNGEN UND TOLERANZEN GEMAESS GPS (ISO STANDARDS).
THIS DRAWING IS A CONTROLLED DOCUMENT.
DIMENSIONING AND TOLERANCING PER GPS (ISO STANDARDS).

DIMENSIONS: MASSEINHEITEN: mm
TOLERANCES UNLESS OTHERWISE SPECIFIED: ALLGEMEINTOLERANZEN
0 PLC ±
1 PLC ±
2 PLC ±
3 PLC ±
4 PLC ±
ANGLES/WINKEL ±
DIN ISO 2768-mK

MATERIAL: SEE TABLE / Siehe Tabelle
FINISH/OBERFLAECHE/FARBE: SEE TABLE / Siehe Tabelle

DWN Sundareshan M 26SEP2013
CHK F. Wittrock 26SEP2013
APVD A. Ketteler 19DEC2013
PRODUCT SPEC PRODUKTSPEC. 12
APPLICATION SPEC VERARBEITUNGSSPEZ. 13
WEIGHT GEWICHT -

TE Connectivity

NAME: OUTER HOUSING, HV CONNECTOR, 5 POS
Aussengehaeuse, HV Stecker, 5 polig
AMP MCP6.3/4.8K

SIZE A1 | CAGE CODE - | DRAWING NO ZEICHNUNGS-NR. C-2141608 | RESTRICTED TO NUR FUER -

CUSTOMER DRAWING /KUNDENZEICHNUNG | SCALE MASSSTAB 2:1 | SHEET BLATT 1 OF VON 1 | REV G

4805 (3/13)