© – TE Connectivity. All Rights Reserved.

REVISIONS					
P	LTR	DESCRIPTION	DATE	DWN	APVD
	D	REVISED PER ECR-24-213594	02JUL2024	RK	FJS

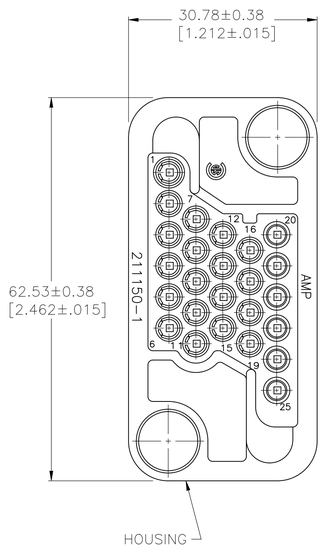

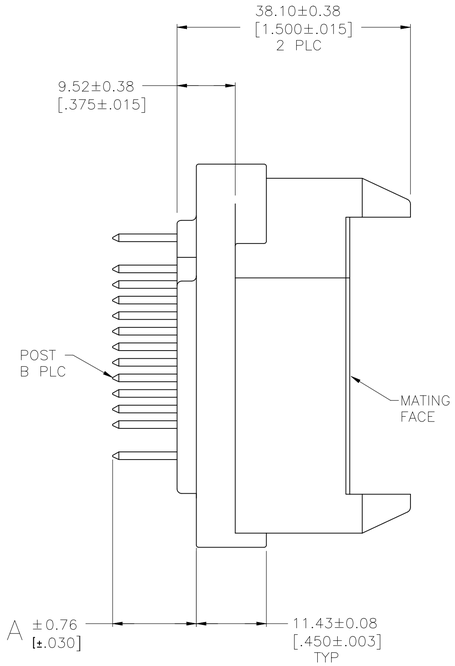

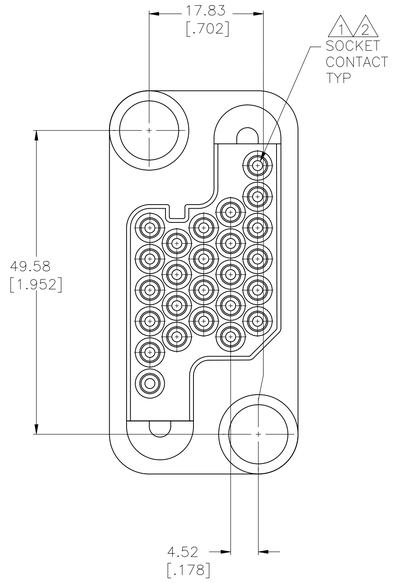

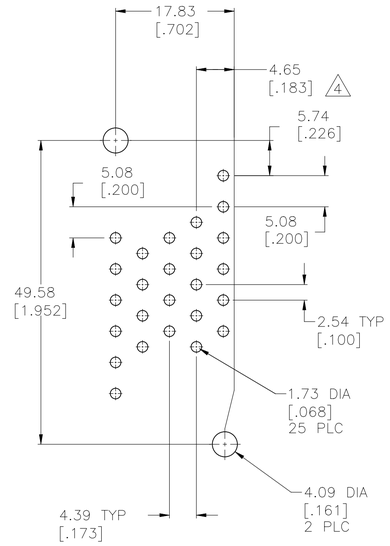

RECOMMENDED PC BOARD LAYOUT

1. ALL POSITIONS LOADED WITH POSTED SOCKET CONTACTS EXCEPT 4,13,17,21, & 25.

2. SOCKET CONTACT: 0.76um[.000030] MIN GOLD FOR A LENGTH OF 5.08[.200] MIN FROM MATING END, GOLD FLASH ON THE REMAINDER, BOTH OVER 1.27um[.000050] MIN NICKEL ON SOCKET END. POST: 2.54um[.000100] MIN TIN-LEAD OVER 2.54um[.000100] MIN COPPER.

3. CONTACT ASSEMBLY SHOULD BE FULLY SEATED IN HOUSING PRIOR TO SOLDERING TO PRINTED CIRCUIT BOARD.

4. THIS DIMENSION HAS BEEN CHANGED FROM THE STANDARD MOUNTING DIMENSION BY 0.13[.005] DUE TO THE POSTED CONTACT.

5. HOUSING: POLYESTER, BLACK.
SOCKET CONTACT: BRASS.
SPRING: STAINLESS STEEL.
POST: BRASS.

6. SOCKET CONTACT: 0.76um[.000030] MIN PRECIOUS METAL PLATE FOR A LENGTH OF 5.08[.200] MIN FROM MATING END, GOLD FLASH ON THE REMAINDER, BOTH OVER 1.27um[.000050] MIN NICKEL ON SOCKET END. POST: 2.54um[.000100] MIN TIN OVER 2.54um[.000100] MIN COPPER.

7. OBSOLETE PARTS: OBSOLETE CIS STREAMLINING PER D.RENAUD/D.SINISI

	OBSOLETE	6	1 (20)	20	13.18 [.519]	~~213881-4~~
		6	FULLY (25)	25	9.40 [.370]	213881-3
7	OBSOLETE	2	1 (20)	20	13.18 [.519]	~~213881-2~~
	OBSOLETE	2	FULLY (25)	25	9.40 [.370]	~~213881-1~~
		FINISH	CAVITIES LOADED	B	A	PART NUMBER

THIS DRAWING IS A CONTROLLED DOCUMENT.

DIMENSIONS: mm [INCHES]

TOLERANCES UNLESS OTHERWISE SPECIFIED:
0 PLC ± –
1 PLC ± –
2 PLC ± 0.13 [.005]
3 PLC ± –
4 PLC ± –
ANGLES ± –

MATERIAL – 5

FINISH –

DWN C.OBERMAN –
CHK R.STONE 5-30-95
APVD M.McALONIS 5-30-95

PRODUCT SPEC –
APPLICATION SPEC –
WEIGHT –

TE Connectivity

NAME PLUG ASSEMBLY, 25 POSITION, DRAWER CONNECTOR, METRIMATE –

SIZE	CAGE CODE	DRAWING NO	RESTRICTED TO
A1	00779	C-213881	–

CUSTOMER DRAWING | SCALE 2:1 | SHEET 1 OF 1 | REV D

4805 (1/15)