© 2019 TE Connectivity. All Rights Reserved.

REVISIONS					
P	LTR	DESCRIPTION	DATE	DWN	APVD
	P2	REVISED PER ECR-22-150475	29AUG2022	RK	MZ
	R	REVISED PER ECR-24-213594	24JUL2024	RK	FJS

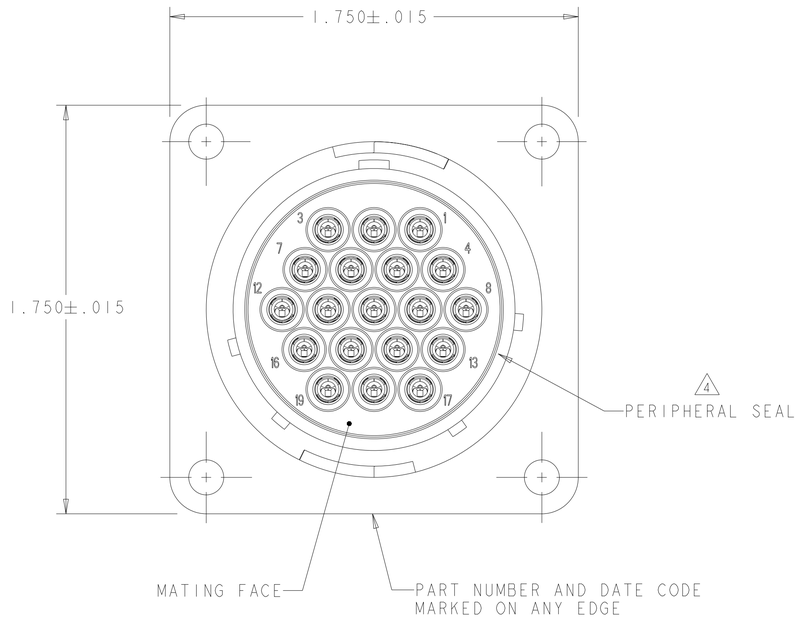

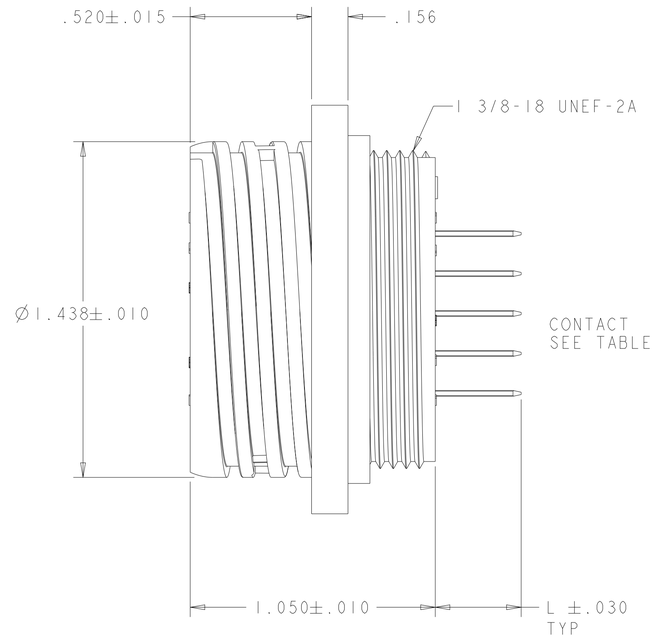

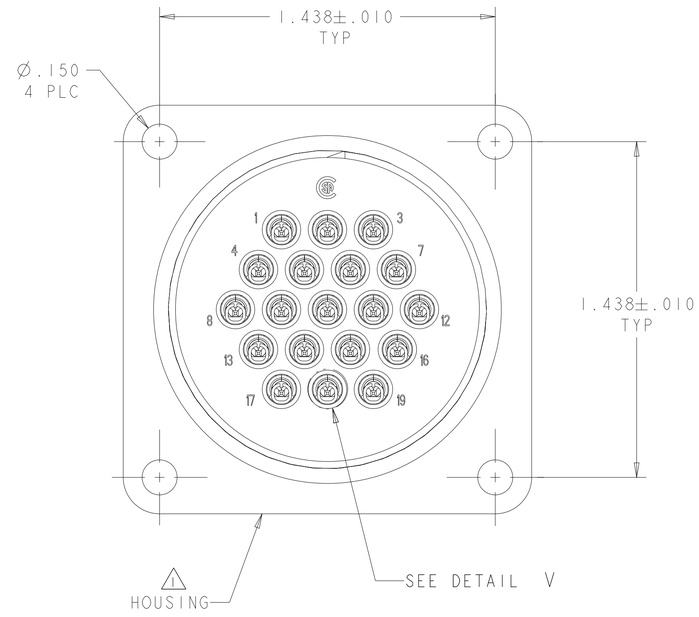

1. HOUSING: NYLON, UL 94 V-0 RATED, COLOR: BLACK.
2. CONTACT:
   BODY - BRASS, .000030 MIN GOLD FOR A LENGTH OF .200 MIN FROM MATING END, GOLD FLASH ON REMAINDER, BOTH OVER .000050 MIN NICKEL.
   POST - BRASS, .000100 MIN TIN-LEAD OVER .000050 MIN NICKEL.
3. CONTACT:
   BODY - BRASS, .000100 MIN TIN-LEAD OVER .000050 MIN NICKEL.
   POST - BRASS, .000100 MIN TIN-LEAD OVER .000050 MIN NICKEL.
4. PERIPHERAL SEAL: ELASTOMER, COLOR: BLACK.
5. .009 MAXIMUM CONTACT LEAD-IN SEAM GAP PERMISSIBLE ON MATING FACE END.
6. CONTACT:
   BODY - BRASS, .000030 MIN GOLD OVER .000030 MIN NICKEL.
   POST - BRASS, .000100 MIN TIN-LEAD OVER .000050 MIN NICKEL.
7. CONTACT:
   BODY - BRASS, .000100 MIN TIN OVER .000050 MIN NICKEL.
   POST - BRASS, .000100 MIN TIN OVER .000050 MIN NICKEL.
8. CONTACT:
   BODY - BRASS, .000030 MIN PRECIOUS METAL PLATE FOR A LENGTH OF .200 MIN FROM MATING END, GOLD FLASH ON REMAINDER, BOTH OVER .000050 MIN NICKEL.
   POST - BRASS, .000100 MIN TIN OVER .000050 MIN NICKEL.
9. OBSOLETE PARTS

	PERIPHERAL SEAL	L	CONTACT FINISH	SELECT LOADED IN POSITIONS	PART NUMBER
	YES	.368	8	1-4,7,8,10-12,14-19	1-213781-0
OBSOLETE	NO	.557	8	ALL	~~213781-9~~
OBSOLETE	NO	.348	7	ALL	~~213781-8~~
	YES	.368	7	1-4,7,8,10-12,16-19	213781-7
9 OBSOLETE	YES	.368	6	1-4,7,8,10-12,16-19	~~213781-6~~
OBSOLETE	YES	.368	3	1-4,7,8,10-12,16-19	~~213781-5~~
OBSOLETE	YES	.368	3	1-4,7,8,10-12,16-19	~~213781-4~~
OBSOLETE	YES	.368	3	1-4,7,8,10-12,16-19	~~213781-2~~
OBSOLETE	NO	.557	2	ALL	~~213781-1~~

THIS DRAWING IS A CONTROLLED DOCUMENT.

DIMENSIONS: INCHES

TOLERANCES UNLESS OTHERWISE SPECIFIED:
0 PLC ±-
1 PLC ±0.0
2 PLC ±0.00
3 PLC ±0.000
4 PLC ±0.0000
ANGLES ±-

MATERIAL - -
FINISH - -

DWN S.WELDON 21MAY2003
CHK S.HEADER 21MAY2003
APVD S.HEADER 21MAY2003
PRODUCT SPEC 108-10024
APPLICATION SPEC 114-10038
WEIGHT -

TE Connectivity

NAME RECEPTACLE ASSEMBLY, POSTED, REVERSE SEX, SERIES 1, 23-19, CPC
-

SIZE	CAGE CODE	DRAWING NO	RESTRICTED TO
A1	00779	C-213781	

CUSTOMER DRAWING | SCALE 3:1 | SHEET 1 OF 2 | REV R

4805 (3/13)

© 2019 TE Connectivity. All Rights Reserved.

REVISIONS					
P	LTR	DESCRIPTION	DATE	DWN	APVD
	-	SEE SHEET 1	-	-	-

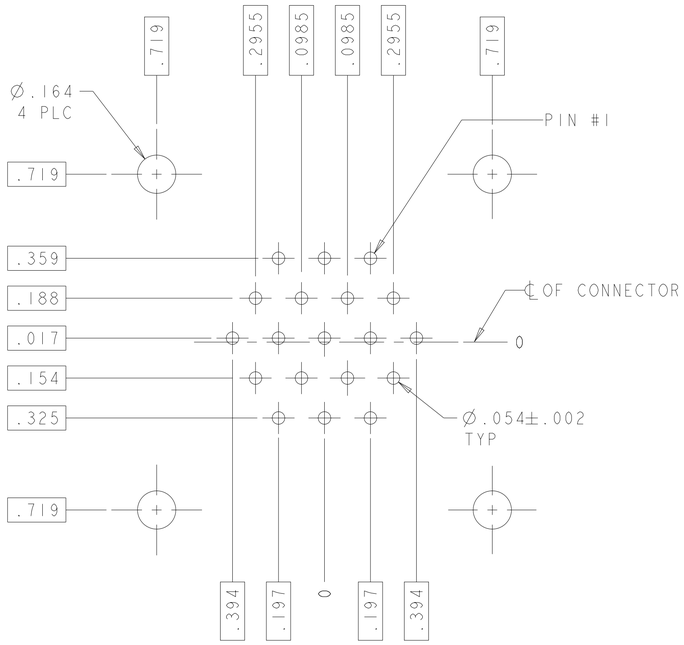

RECOMMENDED PC BOARD LAYOUT

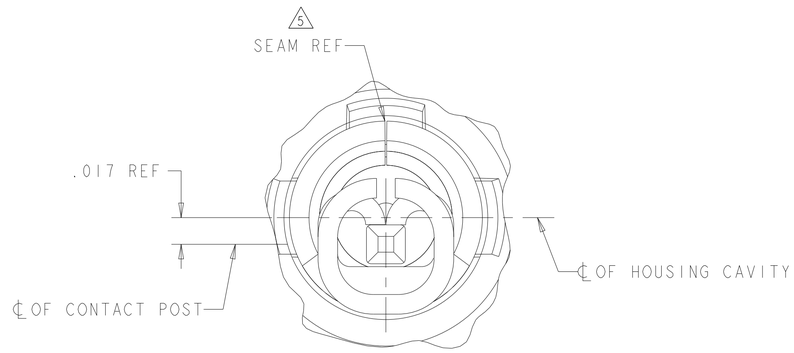

DETAIL V
SCALE 20:1

THIS DRAWING IS A CONTROLLED DOCUMENT.

DIMENSIONS: INCHES

TOLERANCES UNLESS OTHERWISE SPECIFIED:
0 PLC ±-
1 PLC ±0.0
2 PLC ±0.00
3 PLC ±0.000
4 PLC ±0.0000
ANGLES ±-

MATERIAL - -

FINISH - -

DWN S.WELDON 21MAY2003
CHK S.HEADER 21MAY2003
APVD S.HEADER 21MAY2003

PRODUCT SPEC 108-10024
APPLICATION SPEC 114-10038
WEIGHT -

TE Connectivity

NAME RECEPTACLE ASSEMBLY, POSTED, REVERSE SEX, SERIES 1, 23-19, CPC
-

SIZE	CAGE CODE	DRAWING NO	RESTRICTED TO
A1	00779	C-213781	

CUSTOMER DRAWING | SCALE 3:1 | SHEET 2 OF 2 | REV R

4805 (3/13)