© – TE Connectivity. All Rights Reserved.

| REVISIONS | | | | | |
|---|---|---|---|---|---|
| P | LTR | DESCRIPTION | DATE | DWN | APVD |
| | Z | REVISED PER ECR-24-213594 | 02JUL2024 | RK | FJS |

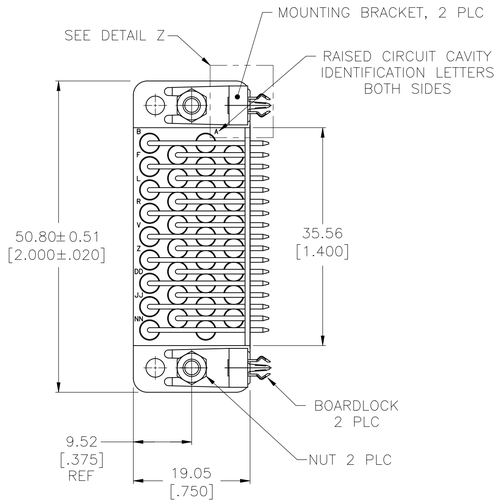


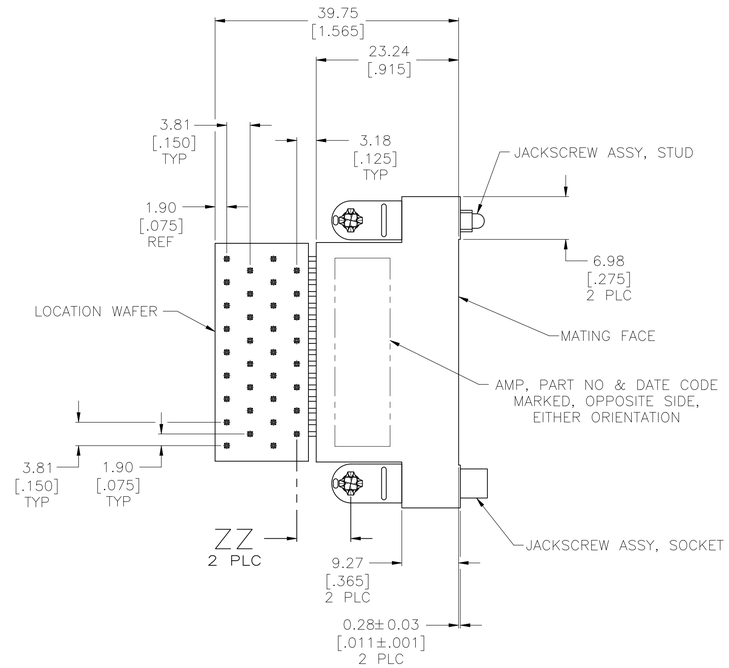


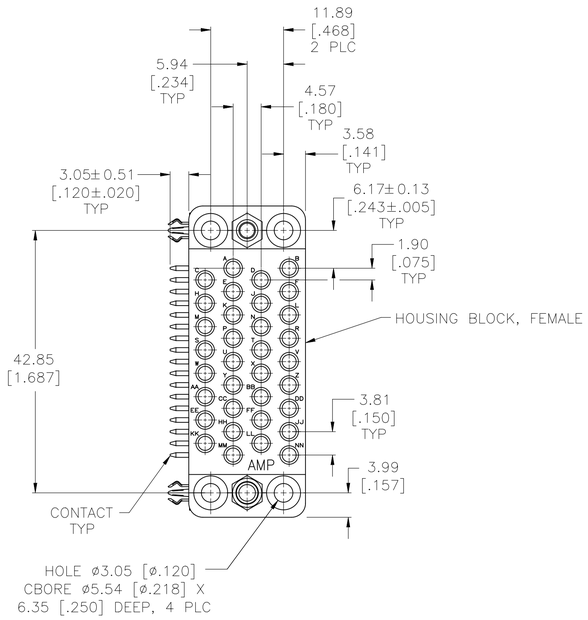


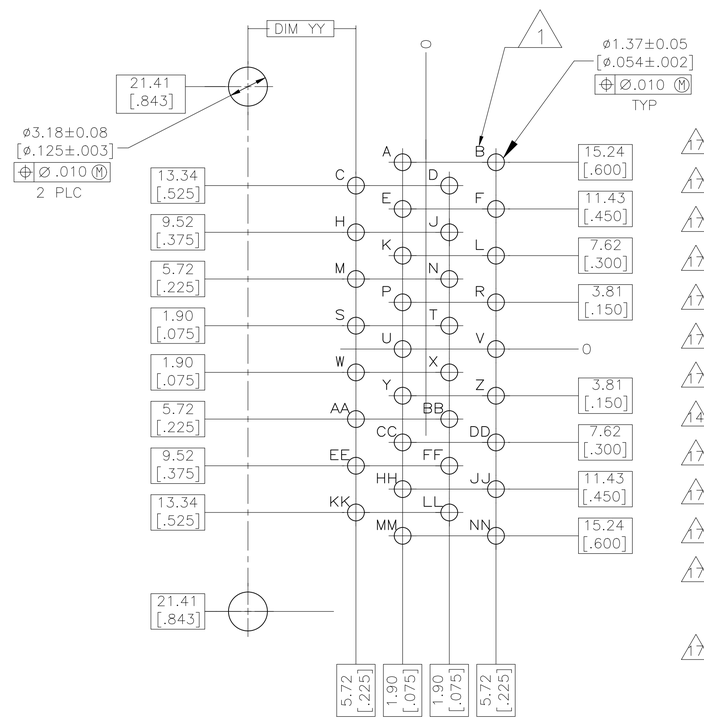


RECOMMENDED PC BOARD LAYOUT
SCALE 4:1
1.57 [.062] PC BOARD THICKNESS

| | | | | | | | |
|---|---|---|---|---|---|---|---|
| 17 | OBSOLETE | 15 16 | 8.81 [.347] | 8.81 [.347] | NO | FULLY LOADED | 14 1-213574-7 |
| 17 | OBSOLETE | 15 16 | 8.81 [.347] | 8.81 [.347] | NO | 11 | 1-213574-6 |
| 17 | OBSOLETE | 15 16 | 8.81 [.347] | 8.81 [.347] | YES | 13 | 1-213574-5 |
| 17 | OBSOLETE | 15 16 | 8.81 [.347] | 8.81 [.347] | YES | 12 | 1-213574-4 |
| 17 | OBSOLETE | 15 16 | 8.81 [.347] | 8.81 [.347] | YES | 11 | 1-213574-3 |
| 17 | OBSOLETE | 15 16 | 8.81 [.347] | 8.81 [.347] | YES | 10 | 1-213574-2 |
| 17 | OBSOLETE | 15 16 | 8.81 [.347] | 8.81 [.347] | YES | FULLY LOADED | 1-213574-1 |
| 14 | OBSOLETE | 7 6 | 8.81 [.347] | 8.81 [.347] | NO | FULLY LOADED | 1-213574-0 |
| 17 | OBSOLETE | 7 6 | 8.81 [.347] | 8.81 [.347] | NO | 11 | 213574-9 |
| 17 | OBSOLETE | 7 6 | 8.38 [.330] | 8.38 [.330] | YES | 13 | 213574-8 |
| 17 | OBSOLETE | 7 6 | 8.81 [.347] | 8.81 [.347] | YES | 12 | 213574-7 |
| 17 | OBSOLETE | 7 6 | 8.81 [.347] | 8.81 [.347] | YES | 11 | 213574-6 |
| | OBSOLETE | – | 8.81 [.347] | 8.81 [.347] | NO | FULLY LOADED | 213574-5 |
| 17 | OBSOLETE | 7 6 | 8.81 [.347] | 8.81 [.347] | YES | 10 | 213574-4 |
| | OBSOLETE | – | 8.81 [.347] | 8.81 [.347] | YES | 9 | 213574-3 |
| | | 7 6 | 8.81 [.347] | 8.81 [.347] | YES | FULLY LOADED | 213574-2 |
| | OBSOLETE | – | 8.81 [.347] | 8.81 [.347] | YES | 8 | 213574-1 |
| | CONTACT/BOARDLOCK PLATING | | ZZ | YY | DIMPLE | CIRCUIT CAVITIES LOADED | PART NUMBER |

1. LETTERS ARE SHOWN ON PC BOARD LAYOUT FOR HOLE LOCATION PURPOSES ONLY.
2. MINERAL REINFORCED, FLAME RETARDANT PHENOLIC, BLACK.
3. JACKSCREW BODY: STAINLESS STEEL PER ASTM-A-582; LOCKWASHER: STAINLESS STEEL PER QQ-S-766; NUT: CARBON STEEL PER QQ-S-637; MOUNTING BRACKET: ZINC PER QQ-Z-363; BOARDLOCK: COPPER ALLOY PER ASTM-B-592.
4. PHENOLIC RESIN LAMINATE, BLACK.
5. BODY: BRASS PER MIL-C-50; SPRING: STAINLESS STEEL PER QQ-S-766; POST: BRASS PER ASTM-B-134.
6. NUT: ZINC PER ASTM-B-633; MOUNTING BRACKET: 3.81um [.000150] MIN NICKEL PER QQ-N-290. OVER 2.54um [.000100] MIN COPPER PER MIL-C-14550 PER MIL-C-14550; BOARDLOCK: 5.08um [.000200] MIN TIN-LEAD PER MIL-T-10727 OVER 1.27um [.000050] MIN NICKEL PER QQ-N-290, LOCKWASHER: PASSIVATED.
7. BODY: 0.76um [.000030] MIN PRECIOUS METAL PLATE FOR A LENGTH OF 5.08 [.200] MIN FROM MATING END OF CONTACT, 2.54um[.000100] MIN TIN-LEAD PER MIL-T-10727 IN WIRE BARREL AREA, BOTH OVER 1.27um [.000050] MIN NICKEL PER QQ-N-290 ON ENTIRE CONTACT; POST: 2.54um [.000100] MIN TIN-LEAD PER MIL-T-10727 OVER 1.27um [.000050] MIN NICKEL PER QQ-N-290.
8. SELECT LOADED CIRCUITS ARE B,C,D,E,F,H,L,N,P,R,S,T,U,V,W,X,Y,AA,HH,KK AND NN.
9. SELECT LOADED CIRCUITS ARE A,B,C,D,E,F,H,J,L,M,N,P,R,S,T,U,V,W,X,Y,AA AND NN.
10. SELECT LOAD CIRCUITS A,B,C,D,E,F,H,P,R,S,T,U,R,S,T,U,V,W,X,Y,AA,BB, AND NN.
11. SELECT LOAD CIRCUITS A,B,C,D,E,F,H,J,K,L,N,P,R,S,T,U,V,W,X,Y,AA,BB, AND NN.
12. SELECT LOAD CIRCUITS A,B,C,D,E,F,H,K,L,N,P,R,S,T,U,V,W,X,Y,AA,BB, AND NN.
13. SELECT LOAD CIRCUITS A,B,C,D,E,F,H,J,L,N,P,R,S,T,U,V,W,X,Y,AA,HH, AND NN.
14. BULK PACKED KIT.
15. BODY: 0.76um [.000030] MIN GOLD PER MIL-G-45204 FOR A LENGTH OF 5.08 [.200] MIN FROM MATING END OF CONTACT, 2.54um[.000100] MIN TIN PER MIL-T-10727 IN WIRE BARREL AREA, BOTH OVER 1.27um [.000050] MIN NICKEL PER QQ-N-290 ON ENTIRE CONTACT; POST: 2.54um [.000100] MIN TIN PER MIL-T-10727 OVER 1.27um [.000050] MIN NICKEL PER QQ-N-290.
16. NUT: ZINC PER ASTM-B-633; MOUNTING BRACKET: 3.81um [.000150] MIN NICKEL PER QQ-N-290. OVER 2.54um [.000100] MIN COPPER PER MIL-C-14550 PER MIL-C-14550; BOARDLOCK: 5.08um [.000200] MIN TIN PER MIL-T-10727 OVER 1.27um [.000050] MIN NICKEL PER QQ-N-290, LOCKWASHER: PASSIVATED.
17. OBSOLETE PARTS: OBSOLETE CIS STREAMLINING PER D.RENAUD/D.SINISI

THIS DRAWING IS A CONTROLLED DOCUMENT.

DIMENSIONS: mm [INCHES]

TOLERANCES UNLESS OTHERWISE SPECIFIED:
0 PLC ± –
1 PLC ± –
2 PLC ± 0.25 [.010]
3 PLC ± –
4 PLC ± –
ANGLES ± –

MATERIAL: HOUSING: 2 HARDWARE: 3 CONTACT: 4 LOCATION WAFER: 5
FINISH: HARDWARE: 3 CONTACT: 4

DWN C RICHARD 11/27/89
CHK R.STONE 12-4-89
APVD –
PRODUCT SPEC –
APPLICATION SPEC –
WEIGHT –

TE Connectivity

NAME: CONNECTOR ASSEMBLY, SOCKET, 34 POSITION, RIGHT ANGLE, WITH BOARDLOCKS, M SERIES

| SIZE | CAGE CODE | DRAWING NO | RESTRICTED TO |
|---|---|---|---|
| A1 | 00779 | C-213574 | – |

CUSTOMER DRAWING | SCALE 2:1 | SHEET 1 OF 1 | REV Z

4805 (1/15)