THIS DRAWING IS UNPUBLISHED. RELEASED FOR PUBLICATION 20
© COPYRIGHT 20 BY - ALL RIGHTS RESERVED.

LOC	DIST
DS	-

REVISIONS

P	LTR	DESCRIPTION	DATE	DWN	APVD
	B	REVISED(ECR-22-159222)	28JUN2023	JY	KT
	C	REVISED(ECR-23-194984)	20AUG2024	JY	YH
	C1	REVISED(ECR-25-239614)	28MAR2025	JY	YH
	C2	REVISED(ECR-25-244209	15MAY2025	JY	YH

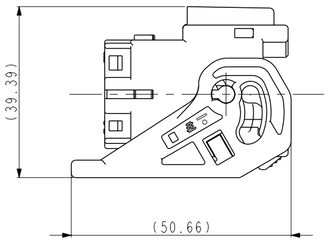

< Closed Status >

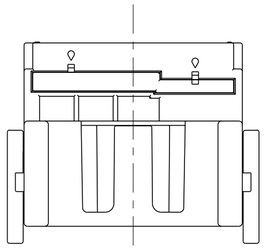

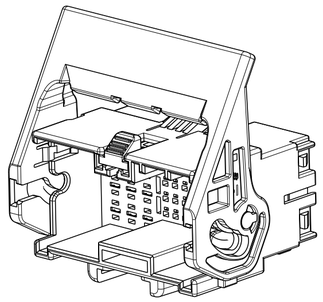

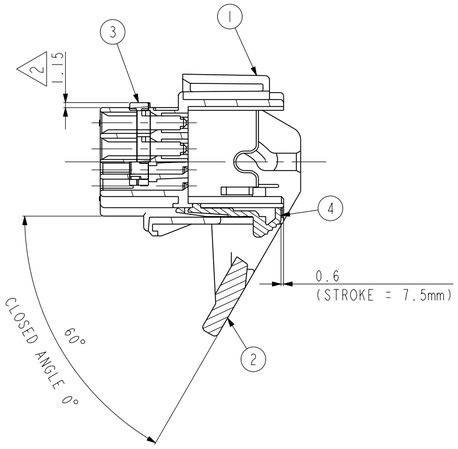

SECTION B-B

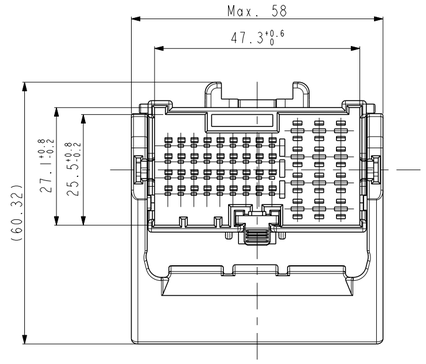

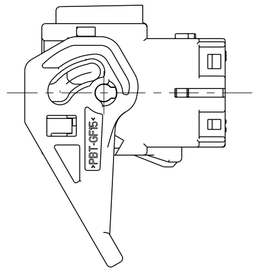

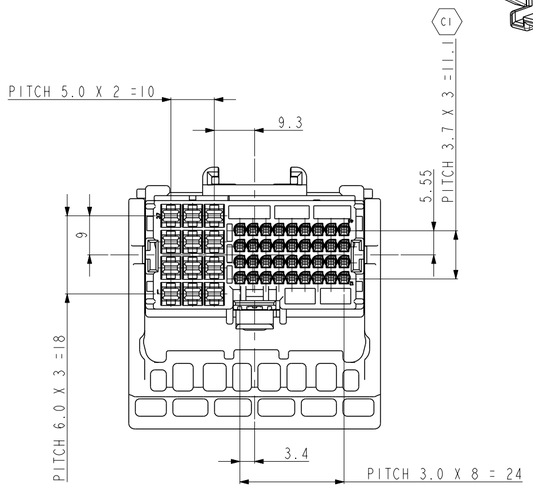

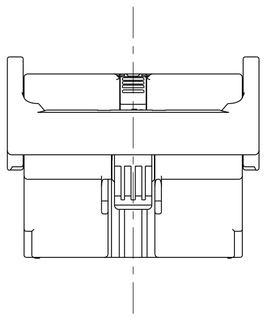

NOTES ;
1. GENERAL TOLERANCE : ±0.3mm, ±3°
2. RETAINER IS PRE-LOCKING
3. MATING PLUG ASS'Y : X-2109452-X
4. APPLICABLE TERMINAL : SEE TABLE 1
5. ALLOWABLE MAX. SINK ; 0.5mm & WARPAGE 0.6mm

ASS'Y P/N	DESCRIPTION
5-2109455-2	.050/.110 HYB 48P CAP ASM CODE A (C2)
6-2109455-2	.050/.110 HYB 48P CAP ASM CODE A (C2)
1-2109455-3	.050/.110 HYB 48P CAP ASM CODE B (C2)
7-2109455-3	.050/.110 HYB 48P CAP ASM CODE B (C2)
2-2109455-4	.050/.110 HYB 48P CAP ASM CODE C
3-2109455-7	.050/.110 HYB 48P CAP ASM CODE D

5-2109455-2/6-2109455-2 (KEY CODE A) MATING PLUG ASS'Y : 0-2109452-2	1-2109455-3/7-2109455-3 (KEY CODE B) MATING PLUG ASS'Y : 1-2109452-3
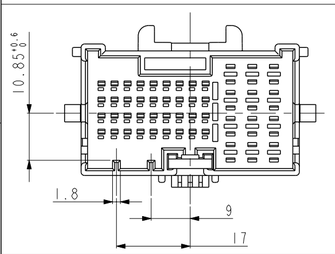	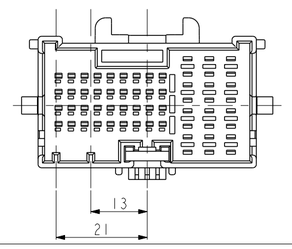
2-2109455-4 (KEY CODE C) MATING PLUG ASS'Y : 2-2109452-4	3-2109455-7 (KEY CODE D) MATING PLUG ASS'Y : 3-2109452-7
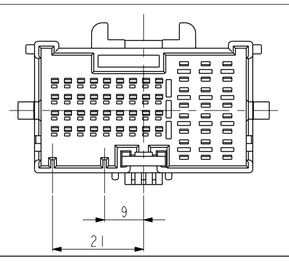	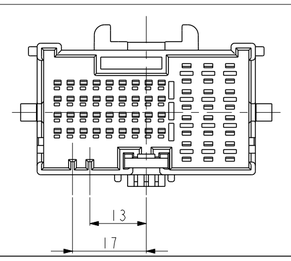

< TABLE 1 >

CONTACT	1.2mm MCON TERMINAL			APPLICATION SPEC.
P/N	1418758-1	1418760-1	1418762-1	114-18464
WIRE SIZE (mm2)	0.35	0.5~0.75	1.0	

CONTACT	2.8mm TERMINAL			APPLICATION SPEC.
P/N	2-964292-1	2-964294-1	2-964296-1	114-18051
WIRE SIZE (mm2)	0.35~0.5	0.5 ~ 1.0	1.25 ~ 2.5	

NO.	COLOR/FINISH	MATERIAL	DESCRIPTION	QTY					
4	RED	PBT-GF20	CPA HSG	1	1	1	1	1	1
3	NATURAL	PBT	DBL HSG	1	1	1	1	1	1
2 (C)	GRAY	PBT-GF15	LEVER HSG	1	1	1	1	1	1
1	GREEN	PBT-GF15	.050/.110 HYB 48P CAP HSG Key code D	-	-	-	-	-	1
	BROWN	PBT-GF15	.050/.110 HYB 48P CAP HSG Key code C	-	-	-	-	1	-
	GRAY	PBT-GF15	.050/.110 HYB 48P CAP HSG Key code B	-	-	1	1	-	-
	BLACK	PBT-GF15	.050/.110 HYB 48P CAP HSG Key code A	1	1	-	-	-	-

THIS DRAWING IS A CONTROLLED DOCUMENT.

DIMENSIONS: mm

TOLERANCES UNLESS OTHERWISE SPECIFIED:
0 PLC ±
1 PLC ±
2 PLC ±
3 PLC ±
4 PLC ±
ANGLES ±3°

MATERIAL: SEE TABLE

FINISH: -

DWN: DG JEONG
CHK: KT LIM
APVD: HG CHO
PRODUCT SPEC: -
APPLICATION SPEC: -
WEIGHT: -

TE Connectivity

NAME: .050/.110 HYB 48P CAP ASS'Y

SIZE	CAGE CODE	DRAWING NO	RESTRICTED TO
A2	00779	C-2109455	-

CUSTOMER DRAWING | SCALE 1:1 | SHEET 1 OF 1 | REV C2