THIS DRAWING IS UNPUBLISHED. RELEASED FOR PUBLICATION -
© COPYRIGHT 19 BY TYCO ELECTRONICS CORPORATION. ALL INTERNATIONAL RIGHTS RESERVED.

LOC	DIST
DS	–

REVISIONS

P	LTR	DESCRIPTION	DATE	DWN	APVD
	A	RELEASED	19.DEC.'11	JY	HG

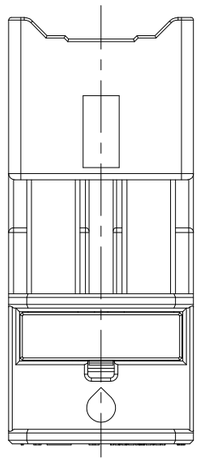

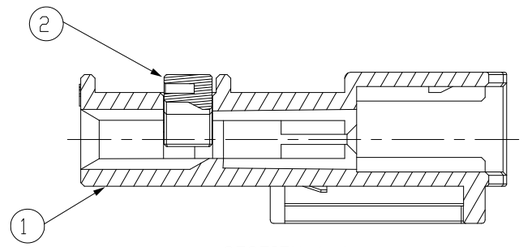

SECTION A-A

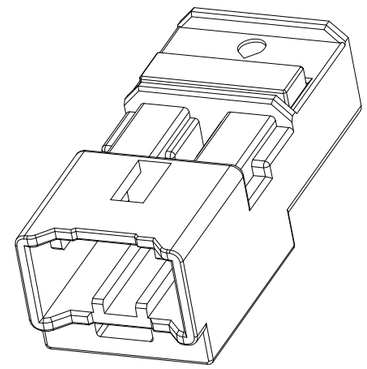

3D VIEW
SCALE 2:1

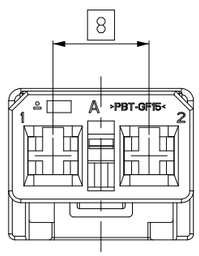

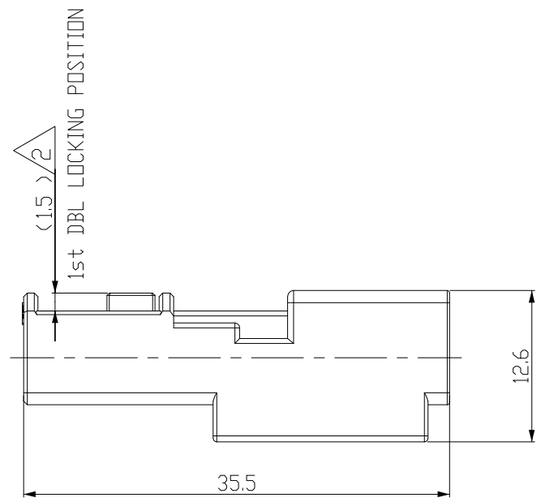

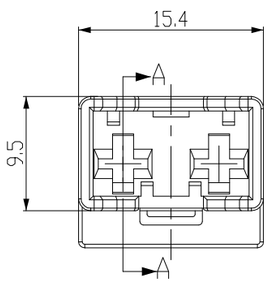

NOTES.

1. GENERAL TOLERANCE: ±0.3, ±3°
2. CONDITION OF DELEVERY
3. THE MATING P/N : 2109363-2
4. APPLICABLE RECEPTACLE P/N : <TABLE 1>
5. THE CLIP P/N : 1897434-2

<TABLE 1>

WIRE SIZE RANGE (mm^2)	INSULATION DIAMETER FLR (mm)	P/N
0.50	1.15-1.60	964284-1/-2

NO	FINISH/COLOR	MATERIAL	DESCRIPTION	QTY
2	NATURAL	PBT-GF15	110 UNSEALD 2P PLUG DBL HSG	A
1	BLACK	PBT-GF15	110 UNSEALD 2P PLUG HSG	A

DESCRIPTION	ASSY P/N
110 UNSEALED 2P PLUG ASSY	2109366-2

THIS DRAWING IS A CONTROLLED DOCUMENT FOR TYCO ELECTRONICS CORPORATION IT IS SUBJECT TO CHANGE AND THE CONTROLLING ENGINEERING ORGANIZATION SHOULD BE CONTACTED FOR THE LATEST REVISION.

DIMENSIONS: mm

TOLERANCES UNLESS OTHERWISE SPECIFIED

0 PLC	±-
1 PLC	±0.5
2 PLC	±0.13
3 PLC	±0.013
4 PLC	±0.0001
ANGLES	±-

MATERIAL –

FINISH –

DWN JY PARK
CHK KT LIM
APVD –
PRODUCT SPEC –
APPLICATION SPEC –
WEIGHT –

TE Connectivity

NAME 110 UNSEALED 2P PLUG ASSY

SIZE	CAGE CODE	DRAWING NO	RESTRICTED TO
A3		C-2109366	–

CUSTOMER DRAWING | SCALE 2:1 | SHEET 1 OF 1 | REV A

1470-19 (2/09)