THIS DRAWING IS UNPUBLISHED. RELEASED FOR PUBLICATION -
© COPYRIGHT 19 BY - ALL RIGHTS RESERVED.

REVISIONS

P	LTR	DESCRIPTION	DATE	DWN	APVD
	A	RELEASED	26.DEC'11	DG	HG
	B	REVISED(ECR-16-005580)	22.MAR'16	CH	HG
	B1	REVISED(ECR-18-011019)	22OCT2018	CH	YJ
	C	REVISED(ECR-20-009533)	09SEP2020	CH	YJ

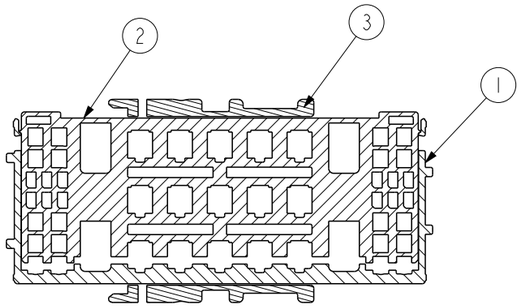

SECTION A-A

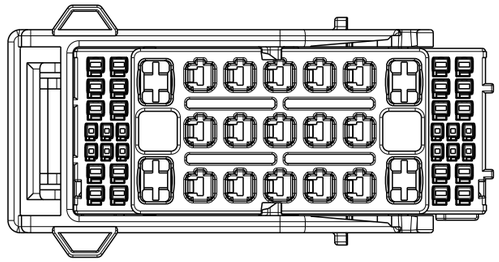

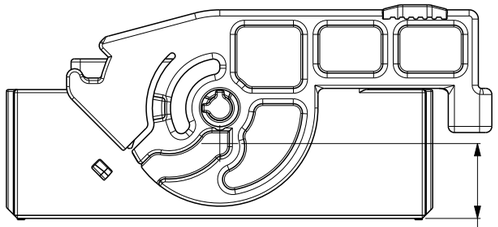

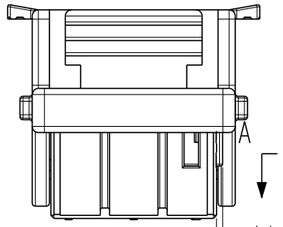

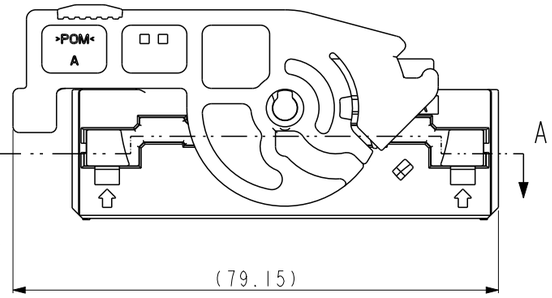

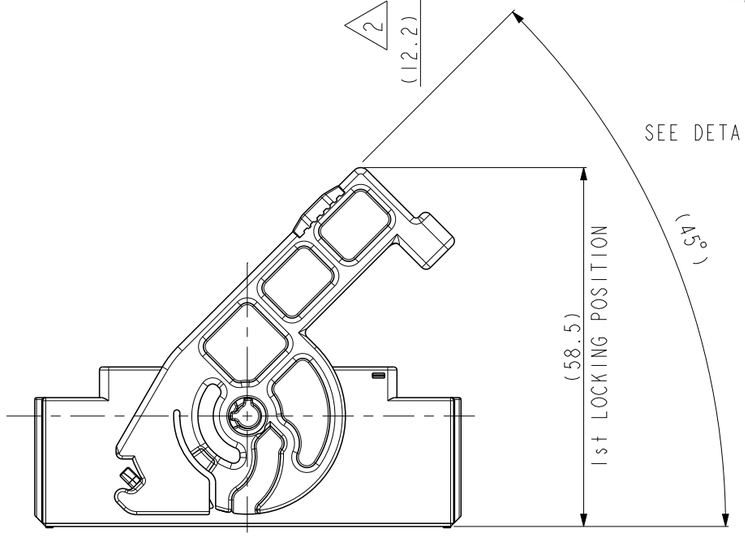

SEE DETAIL A

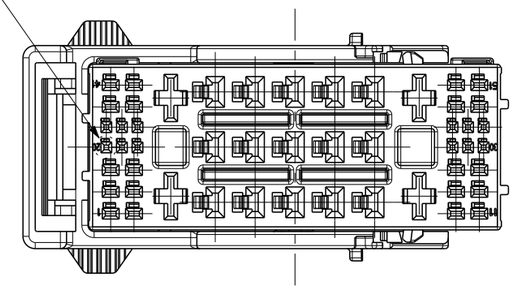

TABLE 1.

TYPE	FINISH	P/N	WIRE RANGE(mm2)
.025 (12PCS)	PRE-TIN	2005097-1	0.22
		2005427-1	0.3~0.5
.060 (20PCS)	PRE-TIN	2109006-1	0.22~0.35
		2109006-2	0.5~0.75
		2109006-3	0.85~1.25
.110 (15PCS)	PRE-TIN	1743162-1	0.3~0.85
		1743163-1	1.25~2.0
		1743465-1	3.0
.250 (4PCS)	PRE-TIN	1241402-1	0.5~1.0
		1241404-1	1.0~2.5
		1241406-1	2.5~4.0

NOTE

1. GENERAL TOLERANCE :±0.3, ±3°
2. CONDITION OF DELIVERY
3. APPLICABLE CAP ASS'Y P/N : N/A
4. APPLICABLE RECEPTACLE CONTACT P/N: TABLE 1

NO	FINISH/COLOR	MATERIAL	DESCRIPTION	Q'TY			
3	GRAY	POM	LEVER HSG	1	1	1	HYB 5IP PLUG ASS'Y_KEY B
2	WHITE	PBT	PLUG DBL HSG	1	1	1	HYB 5IP PLUG ASS'Y
B1	BROWN	PBT	PLUG HSG_KEY B	1	-	-	HYB 5IP PLUG ASS'Y
1	GRAY	PBT	PLUG HSG	-	1	-	DESCRIPTION
	BLACK	PBT	PLUG HSG	-	-	1	
				2109141-4	2109141-3	2109141-2	ASS'Y P/N

KEY CODE 'A' (2109141-2,3)	KEY CODE 'B' (2109141-4) B
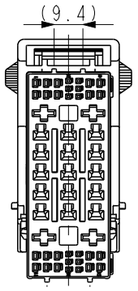	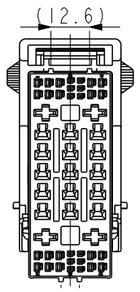
(9.4) (14) SCALE 1:2	(12.6) (6) SCALE 1:2

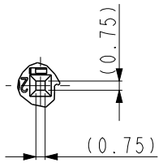

DETAIL A
SCALE 2:1

THIS DRAWING IS A CONTROLLED DOCUMENT.

DIMENSIONS: mm

TOLERANCES UNLESS OTHERWISE SPECIFIED:
0 PLC ±
1 PLC ±
2 PLC ±
3 PLC ±
4 PLC ±
ANGLES ±

MATERIAL

FINISH

DWN CH CHO
CHK KT LIM
APVD HG CHO
PRODUCT SPEC
APPLICATION SPEC
WEIGHT

TE Connectivity

NAME
025/060/110/250 HYBRID
LIF 5IP PLUG ASSY

SIZE	CAGE CODE	DRAWING NO	RESTRICTED TO
A3	00779	C-2109141	-

CUSTOMER DRAWING

SCALE	SHEET	OF	REV
1:1	1	1	C