© 2022 TE Connectivity. All Rights Reserved.

REVISIONS					
P	LTR	DESCRIPTION	DATE	DWN	APVD
	A1	PN-2 ADDED	31MAY2022	DW	CY

AS SHOWN : 2108943-1
AS SHOWN : 2108943-2

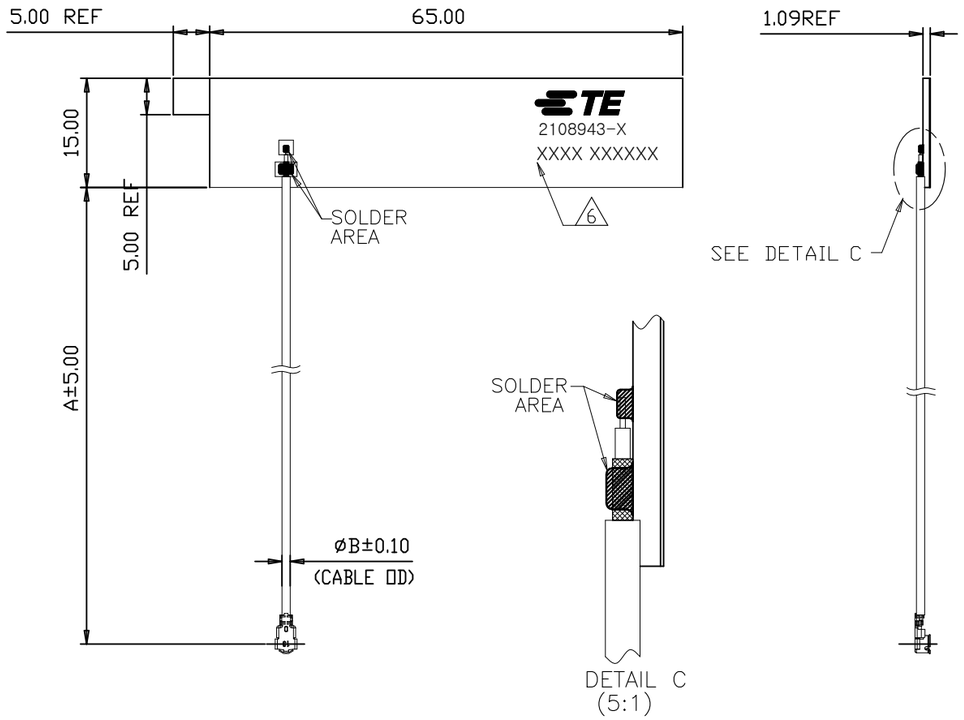

NOTE : UNLESS OTHERWISE SPECIFIED

1. FABRICATE TO MEET IPC-6012, CLASS 2.
   INSPECT TO MEET IPC-A-600, CLASS 2.
2. MATERIAL :
   A. PCB(FR4) + ADHESIVE.
   B. ADHESIVE WITH LINER ON THER BACK SIDE, REMOVE LINER TO APPLY.
   C. CABLE WITH CONNECTOR.
3. FINISH : SOLDERMASK BOTH SIDES, ORANGE
4. GENERAL TOLERANCES : ±0.30
5. PACKING : SECURELY SHRINK WRAPPED, VACUUM PACKED OR BAGS PACKAGED IN BULK.
6. MINIMUM IDENTIFICATION INCLUDES
   A: WORD REV., FOLLOWED BY THE LASTEST REVISION LETTER. AS SHOWN.
   B: 4 DIGITS DATE CODE: FIRST 2 DIGITS FOR THE WEEK CODE AND THE 2 DIGITS FOR THE YEAR CODE.
   OTHERS: SPECIFIC TE INTERNAL USE ONLY.

CONN. TYPE	B(mm)	A(mm)	PART NUMBER
MHF	ø1.13	95.00	2108943-2
		110.00	2108943-1

THIS DRAWING IS A CONTROLLED DOCUMENT.

DIMENSIONS: mm

TOLERANCES UNLESS OTHERWISE SPECIFIED:
0 PLC ± –
1 PLC ± –
2 PLC ± –
3 PLC ± –
4 PLC ± –
ANGLES ± –

MATERIAL: SEE NOTE2

FINISH: –

DWN DW.PARK 06AUG2021
CHK H.SHIN 06AUG2021
APVD CY.PARK 06AUG2021
PRODUCT SPEC 108-61420
APPLICATION SPEC —
WEIGHT —

TE Connectivity Ltd.

NAME: PCB ANTENNA, MHF, 698MHz-2700MHz
–
–

SIZE	CAGE CODE	DRAWING NO	RESTRICTED TO
A3	00779	C-2108943	—

CUSTOMER DRAWING

SCALE	SHEET	REV
NS	1 OF 1	A1