THIS DRAWING IS UNPUBLISHED. RELEASED FOR PUBLICATION 20
© COPYRIGHT 20 BY - ALL RIGHTS RESERVED.

REVISIONS

P	LTR	DESCRIPTION	DATE	DWN	APVD
	B	REVISED PER ECR-25-239012	26MAR2025	SC	D.Z

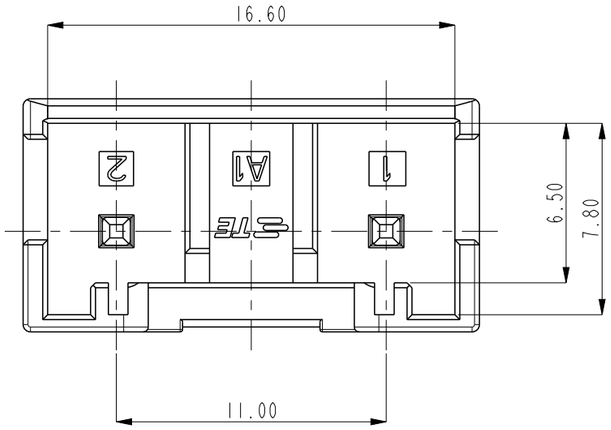

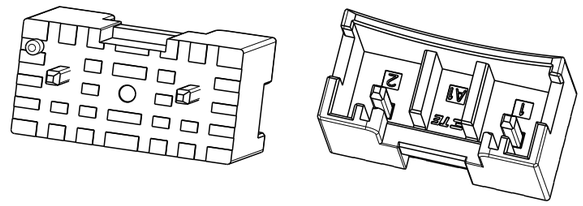

SCALE 2:1

TABLE 1

NO.	NAME	MATERIAL
1	HEADER HOUSING	PA66 UL94 V-0
2	POST CONTACT	PRE-TIN COPPER ALLOY

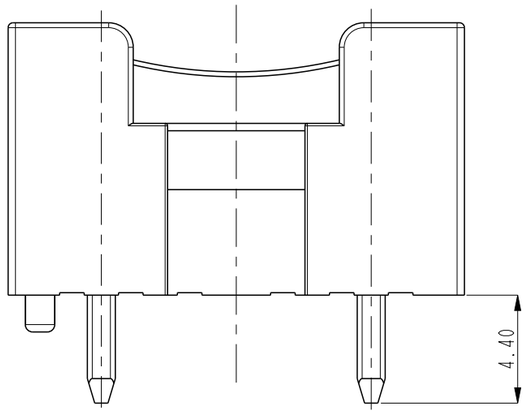

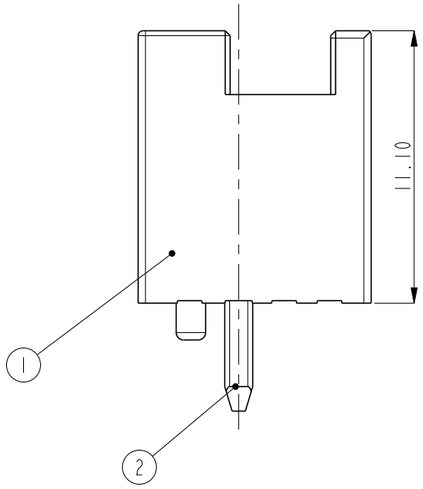

NOTE,

1. GENERAL TOLERANCE: ±0.3
2. GWEPT 750 COMPLIANT PER IEC 60335-1

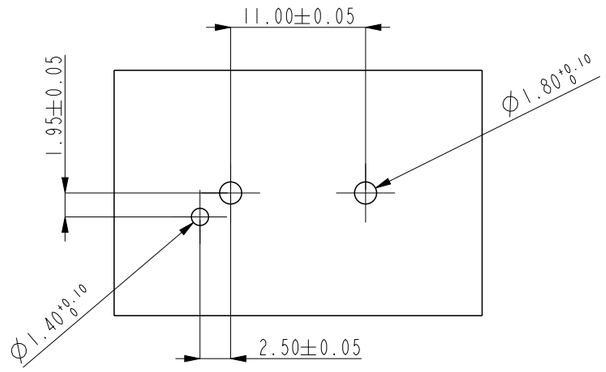

RECOMMANDED PCB LAYOUT

~~2108742-4~~	~~YELLOW~~	~~2108744-4~~
2108742-1	NATURAL	2108744-1
2108742-2		
MATING PART P/N	COLOR	P/N

THIS DRAWING IS A CONTROLLED DOCUMENT.

DIMENSIONS: mm

TOLERANCES UNLESS OTHERWISE SPECIFIED:
0 PLC ±-
1 PLC ±-
2 PLC ±-
3 PLC ±-
4 PLC ±-
ANGLES ±-

MATERIAL: SEE TABLE 1

FINISH: - -

DWN: BH CHO
CHK: BH CHO
APVD: BW KANG
PRODUCT SPEC: 108-61208
APPLICATION SPEC: 114-61072
WEIGHT: -

TE Connectivity

NAME: LOW PROFILE POWER 2P HDR ASSY

SIZE	CAGE CODE	DRAWING NO	RESTRICTED TO
A3	-	C-2108744	

CUSTOMER DRAWING | SCALE 4:1 | SHEET 1 OF 1 | REV B

1470-19 (3/13)