THIS DRAWING IS UNPUBLISHED. RELEASED FOR PUBLICATION -,- .
© COPYRIGHT - By -2123 ALL RIGHTS RESERVED.

LOC	DIST
—	—

REVISIONS

P	LTR	DESCRIPTION	DATE	DWN	APVD
	A	INITIAL RELEASE	24FEB2013	MGM	DW

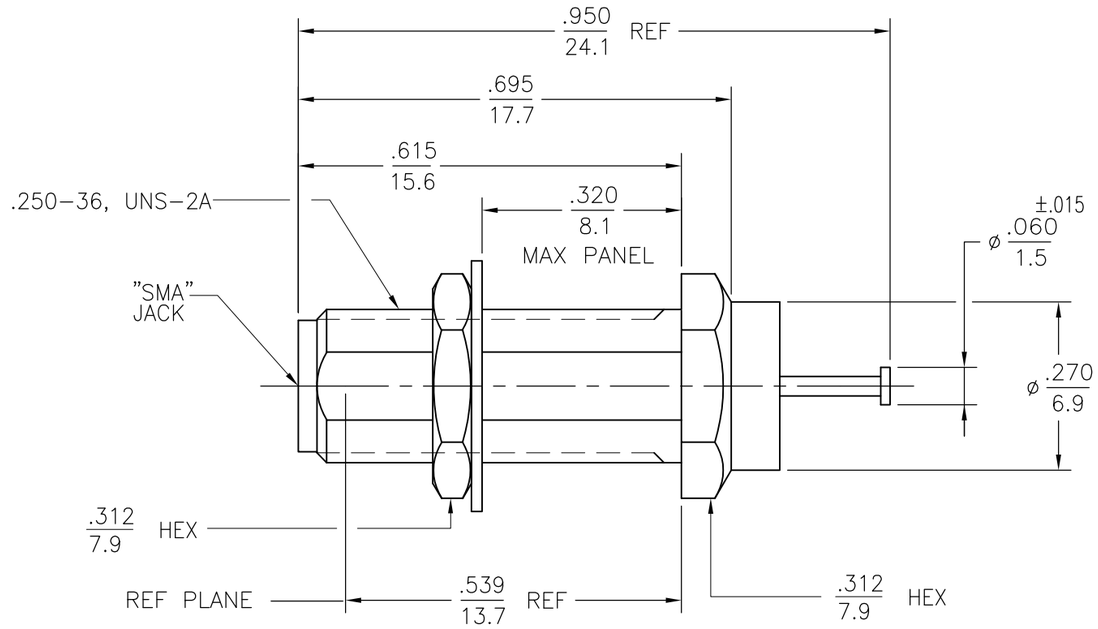

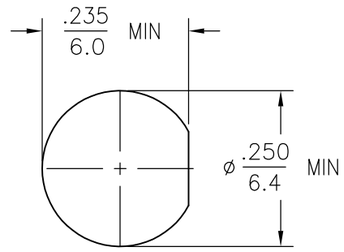

RECOMMENDED MOUNTING HOLE

ELECTRICAL	MECHANICAL	ENVIRONMENTAL
Nominal Impedance (Ohms) 50	Interface Dimensions MIL-STD-348A, Fig. 310-2	TEMPERATURE RATING -55 TO +125°C
Frequency Range (GHz) DC to NOT RATED	Recommended Mating Torque 7-10 IN-LBS	Vibration MIL-STD-202, Method 204, Condition B
Volt Rating (VRMS MAX) @ Sea Level 335	Mating Characteristics:	Shock MIL-STD-202, Method 205, Condition B
VSWR N/A	Insertion (MAX Lbs) 3.0	Thermal Shock MIL-STD-202, Method 107, Condition B,
Insertion Loss (dB MAX) N/A	Withdrawal (MIN Oz) 1.0	Moisture Resistance MIL-STD-202, Method 106
RF Leakage (dB MIN) N/A	Force to Engage and Disengage (In-Lbs MAX) 2.0	Corrosion - MIL-STD-202, Method 101, Condition B, 5% salt spray
Corona, 70,000 Ft (VRMS MIN) 250	Center Contact Captivation	
Dielectric Withstanding Voltage (VRMS MIN) @ Sea Level 1,000	Axial (Lbs) 6.0	
Contact Resistance (Milliohms MAX)	Radial (In-Oz) N/A	
Center Contact 3.0	Cable Retention	
Outer Contact 2.0	Axial Force (Lbs) N/A	
Cable to Housing N/A	Torque (In-Oz) N/A	
RF High Potential @ Sea Level (VRMS MIN @ 5 MHz) 670	Weight (Grams) TBD	
I.R.(Megohms MIN) 5,000		

.XXX = in
XX.X = mm (REF)

COMPONENT	MATERIAL	FINISH
HOUSING MOUNTING NUT LOCKWASHER	STAINLESS STEEL PER ASTM-A484 AND ASTM-A582, TYPE 303	PASSIVATE PER QQ-P-35
DIELECTRIC	TFE FLUOROCARBON PER ASTM-D-1457	N/A
CENTER CONTACT	BERYLLIUM COPPER PER ASTM-B-196 OR ASTM-B-197, ALLOY C17300, CONDITION H	GOLD PLATE PER MIL-G-45204

THIS DRAWING IS A CONTROLLED DOCUMENT.

DIMENSIONS: INCHES

TOLERANCES UNLESS OTHERWISE SPECIFIED:
0 PLC ± -
1 PLC ± -
2 PLC ± -
3 PLC ± -
4 PLC ± -
ANGLES ± -

MATERIAL -
FINISH -

DWN MANJUNATH GM 24FEB2013
CHK Wilson, Denver H 24FEB2013
APVD Wilson, Denver H 24FEB2013
PRODUCT SPEC —
APPLICATION SPEC —
WEIGHT —

TE Connectivity

NAME "SMA" BULKHEAD FEEDTHRU LOW PASS FILTER JACK

SIZE	CAGE CODE	DRAWING NO	RESTRICTED TO
A3	00779	C-2101631	—

CUSTOMER DRAWING | SCALE 1:1 | SHEET 1 OF 1 | REV A