THIS DRAWING IS UNPUBLISHED. RELEASED FOR PUBLICATION -,- .
© COPYRIGHT - By - ALL RIGHTS RESERVED.

LOC	DIST
—	—

REVISIONS

P	LTR	DESCRIPTION	DATE	DWN	APVD
	B	REV PER ECO 14-003372	3-7-14	CT	DW

COMPONENT	MATERIAL	FINISH
HOUSING MOUNTING NUT	STAINLESS STEEL PER ASTM-A484 AND ASTM-A582, TYPE 303	PASSIVATE PER SAE-AMS-2700
LOCKWASHER	SST PER ASTM-A240	PASSIVATE PER SAE-AMS-2700
DIELECTRIC	TFE FLUOROCARBON PER ASTM-D-1457	N/A
CENTER CONTACT	BERYLLIUM COPPER PER ASTM B 196, ALLOY C17300, CONDITION H	GOLD PLATE PER ASTM-B488

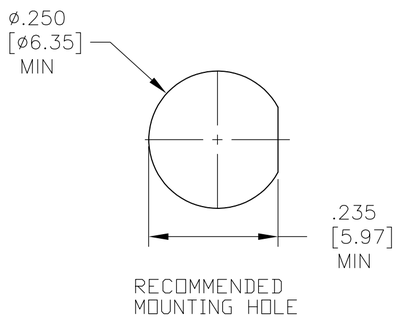

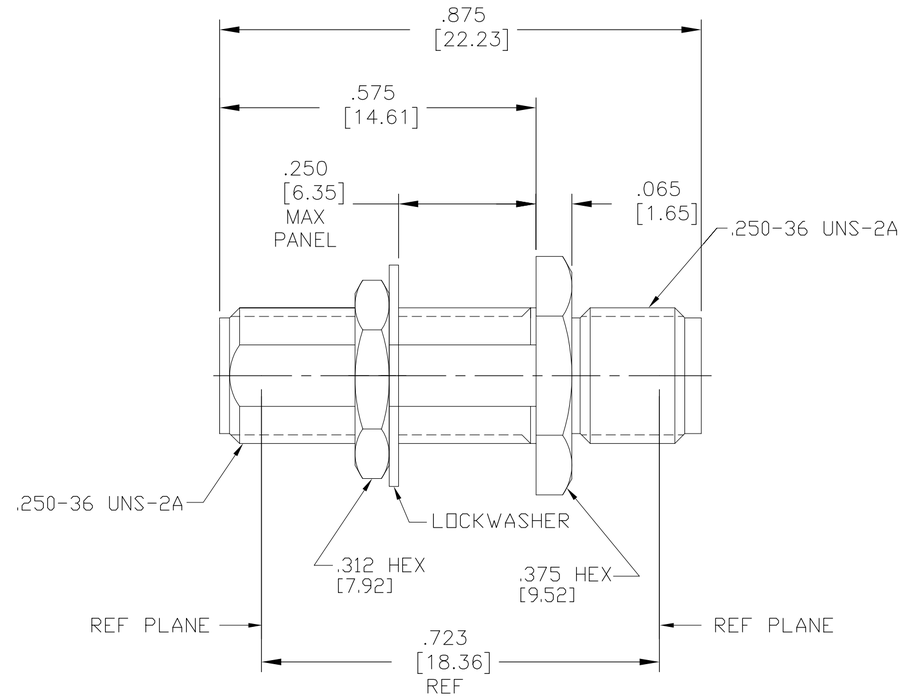

ELECTRICAL	
Nominal Impedance (Ohms)	50
Frequency Range (GHz)	DC to 18
Volt Rating (VRMS MAX) @ Sea Level	335
VSWR	1.05+.005(f)GHz
Insertion Loss (dB MAX)	.06 $\sqrt{fGHz}$
RF Leakage (dB MIN)	-(90 - f(GHz))
Corona, 70,000 Ft (VRMS MIN)	250
Dielectric Withstanding Voltage (VRMS MIN) @ Sea Level	1000
Contact Resistance (Milliohms MAX)	
Center Contact	4.0
Outer Contact	2.0
RF High Potential @ Sea Level (VRMS MIN @ 5 MHz)	670
I.R.(Megohms MIN)	10,000

MECHANICAL	
Interface Dimensions MIL-STD-348, Fig.	310.2
Recommended Mating Torque	7-10 In/Lbs
Mating Characteristics:	
Insertion (MAX Lbs)	3.0
Withdrawal (MIN Oz)	1.0
Force to Engage and Disengage (In/Lbs MAX)	2.0
Center Contact Captivation	
Axial (Lbs)	10.0
Radial (In/Oz)	N/A
Weight (Grams)	TBD

ENVIRONMENTAL
TEMPERATURE RATING -65°C TO +165°C
Vibration MIL-STD-202, Method 204, Condition D
Shock MIL-STD-202, Method 213, Condition I
Thermal Shock MIL-STD-202, Method 107, Condition C
Moisture Resistance MIL-STD-202, Method 106, Except (7b (Vibration) Shall Be Omitted
Corrosion - MIL-STD-202, Method 101, Condition B, 5% salt spray

2101130-1
PART NUMBER

THIS DRAWING IS A CONTROLLED DOCUMENT.

DIMENSIONS: INCHES

TOLERANCES UNLESS OTHERWISE SPECIFIED:
0 PLC ± -
1 PLC ± -
2 PLC ± -
3 PLC ± .005
4 PLC ± -
ANGLES ± -

MATERIAL: SEE TABLE
FINISH: SEE TABLE

DWN C.C.THOMAS 10JAN2014
CHK D.WILSON 1-10-14
APVD D.WILSON 1-10-14
PRODUCT SPEC —
APPLICATION SPEC —
WEIGHT —

TE Connectivity

NAME: SMA JACK TO JACK ADAPTER, BULKHEAD FEED-THRU

SIZE	CAGE CODE	DRAWING NO	RESTRICTED TO
A2	00779	C-2101130	—

CUSTOMER DRAWING | SCALE 5:1 | SHEET 1 OF 1 | REV B

1471-9 (3/11)

10:31am