DRAWING MADE IN THIRD ANGLE PROJECTION

THIS DRAWING IS UNPUBLISHED. RELEASED FOR PUBLICATION .19 .

© COPYRIGHT 19 BY AMP INCORPORATED, HARRISBURG, PA. ALL INTERNATIONAL RIGHTS RESERVED. AMP PRODUCTS MAY BE COVERED BY U.S. AND FOREIGN PATENTS AND/OR PATENTS PENDING.

LOC	DIST	P	F
BD	39		

REVISIONS

ZONE	LTR	DESCRIPTION	DATE	APPD
	B	REVISED & REDRAWN ECN-1465	-	-

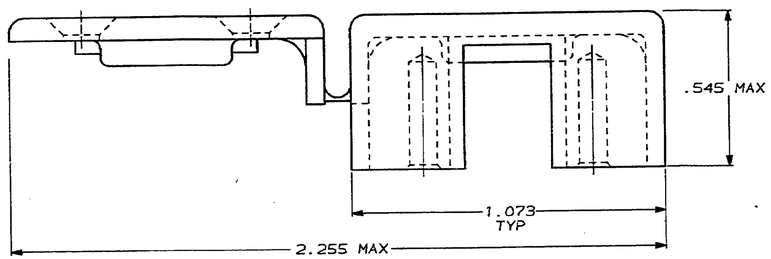

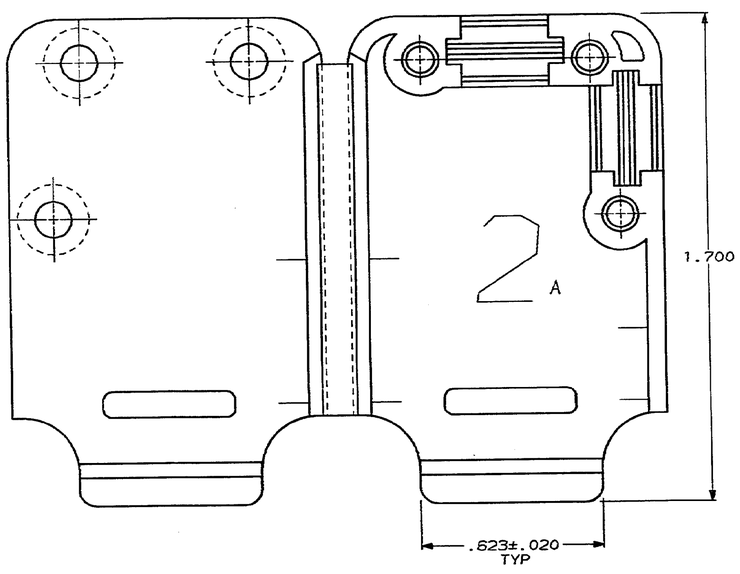

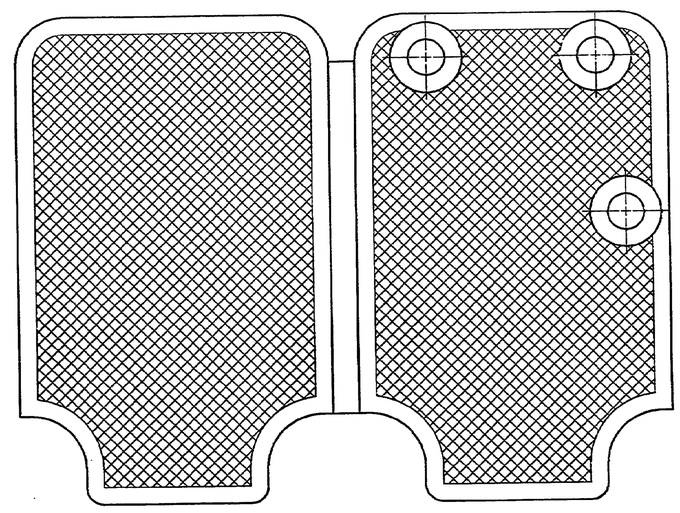

AS SHOWN	207471-1
REMARKS	PART NUMBER

UNLESS OTHERWISE SPECIFIED DIMENSIONS ARE IN INCHES
TOLERANCES ON :
2 PL DEC ±-
3 PL DEC ±.005
ANGLES ±-

MATERIAL
POLYPROPYLENE
COLOR: BLACK

FINISH
-

DR E Weiden 9-16-86
CHK E Reichert 9-16-86
APPD J. Schneider 9-16-86
APPD - U. Kumar 9/16/86
PRODUCT SPEC -
APPLICATION SPEC -
WEIGHT -

AMP | AMP INCORPORATED Harrisburg, Pa. 17105

NAME
CABLE CLAMP HOUSING, SIZE 2, ONE PIECE, 90° & 180° EXIT, AMPLIMITE®

SIZE	FSCM NO	DRAWING NO
D	00779	207471
SCALE NTS		SHEET 1 OF 1

CUSTOMER DRAWING

AMP 1755-3 REV 10-84