© – TE Connectivity. All Rights Reserved.

REVISIONS					
P	LTR	DESCRIPTION	DATE	DWN	APVD
	AK	REVISED PER ECR-24-213594	01JUL2024	RK	FJS

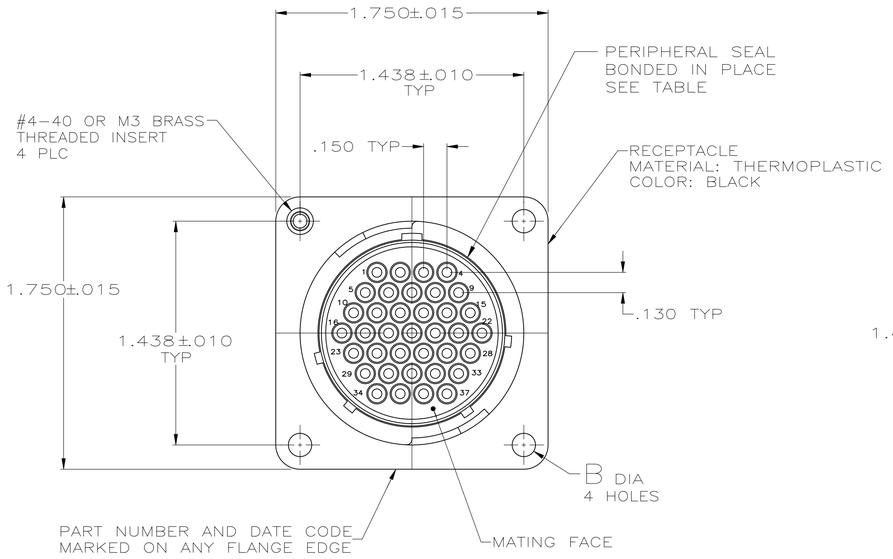

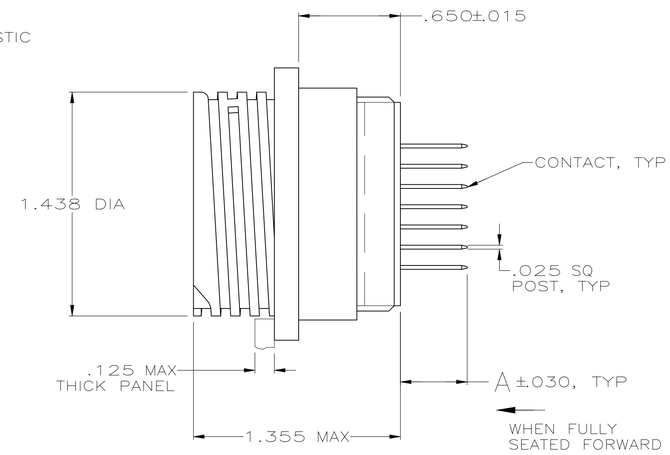

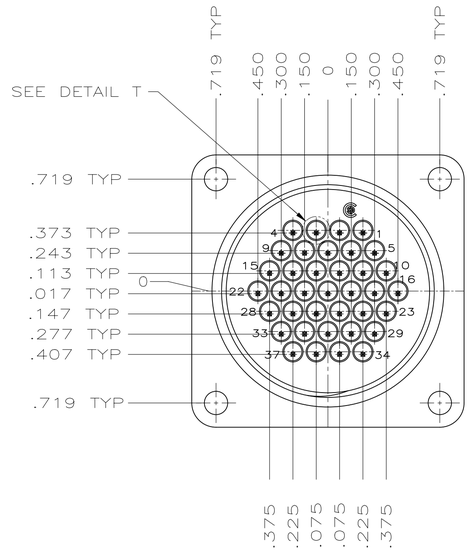

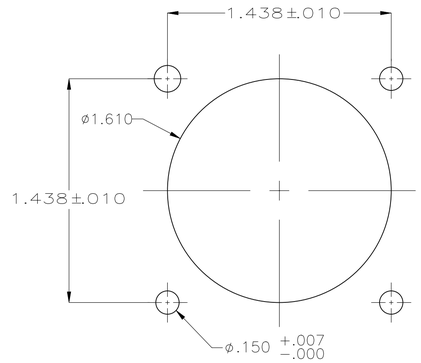

RECOMMENDED PANEL CUT OUT

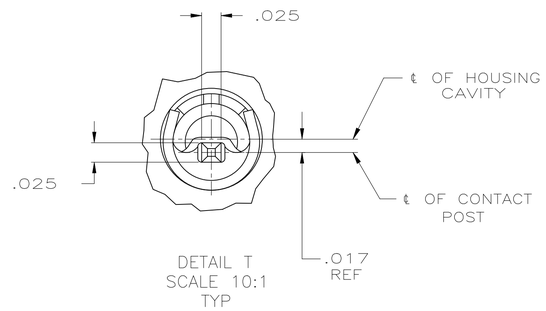

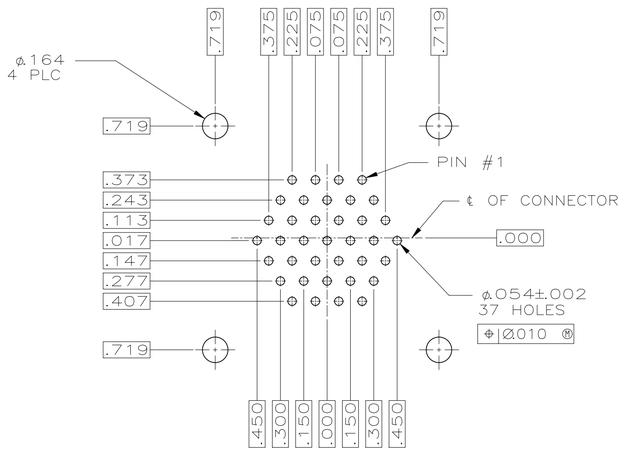

RECOMMENDED P.C. BOARD LAYOUT

1 CONNECTOR WILL ACCEPT POSTED TYPE III+ PIN CONTACTS.

2 CONTACT BODY: SELECT GOLD OVER NICKEL.
CONTACT POST: TIN-LEAD PER MIL-T-10727 OVER COPPER PER MIL-C-14550A.

3 RECOMMENDED PC BOARD HOLE SIZE FOR CONTACT POST: 1.02±0.08[.040±.003] DIA.

4

5 CONTACT BODY: SELECT PRECIOUS METAL PLATE OVER NICKEL.
CONTACT POST: TIN OVER NICKEL.

6 POSITIONS LOADED WITH CONTACTS: 1–4, 10–17, 19–22, 24, 25, 29, 30, 32, 33.

7 POSITIONS LOADED WITH CONTACTS: 1–20. 22–28, 30–37.

8 OBSOLETE PARTS: OBSOLETE CIS STREAMLINING PER D.RENAUD/D.SINISI.

9 CONTACT BODY: TIN OVER NICKEL.
CONTACT POST: TIN OVER NICKEL.

10 CONTACT BODY: SELECT GOLD OVER NICKEL.
CONTACT POST: TIN/LEAD OVER NICKEL.

11 CONTACT BODY: TIN/LEAD OVER NICKEL.
CONTACT POST: TIN/LEAD OVER NICKEL.

		CONTACT FINISH	M3 INSERTS	4-40 INSERTS	PERIPHERAL SEAL	B	A	PART NUMBER
	5	NO	YES	NO	—	.220	3-206934-1
	5	NO	YES	NO	—	.220	3-206934-0
OBSOLETE	5	NO	YES	YES	—	.170	~~2-206934-9~~
OBSOLETE	5	NO	YES	NO	—	.413	~~2-206934-8~~
PRELIMINARY	5	NO	YES	NO	—	.257	2-206934-7
OBSOLETE	9	NO	YES	YES	—	.119	~~2-206934-6~~
OBSOLETE	5	NO	NO	NO	.150±.003	.240	~~2-206934-5~~
7	10	NO	NO	NO	.150±.003	.220	2-206934-3
OBSOLETE	5	NO	NO	YES	.150±.003	.119	~~2-206934-2~~
	5	NO	NO	NO	.150±.003	.119	2-206934-1
8 OBSOLETE	5	NO	YES	YES	–	.618	~~2-206934-0~~
OBSOLETE	5	NO	NO	NO	.150±.003	.618	~~1-206934-9~~
	5	NO	NO	NO	.150±.003	.429	1-206934-8
	5	NO	YES	YES	–	.119	1-206934-7
OBSOLETE	10	NO	NO	YES	.150±.003	.429	~~1-206934-5~~
OBSOLETE	10	NO	YES	NO	–	.618	~~1-206934-4~~
OBSOLETE		NO	YES	NO	–	.220	~~1-206934-3~~
6 OBSOLETE	11	NO	NO	NO	.150±.003	.429	~~1-206934-2~~
	5	NO	NO	NO	.150±.003	.220	1-206934-1
OBSOLETE	10	YES	NO	YES	–	.119	~~1-206934-0~~
OBSOLETE	10	YES	YES	YES	–	.119	~~206934-9~~
OBSOLETE	10	NO	NO	NO	.150±.003	.618	~~206934-7~~
		NO	NO	NO	.150±.003	.429	~~206934-6~~
OBSOLETE	10	NO	NO	NO	.150±.003	.119	~~206934-5~~
OBSOLETE	10	NO	YES	NO	–	.220	~~206934-4~~
		NO	NO	NO	.158±.001	.618	~~206934-3~~
		NO	NO	NO	.158±.001	.429	~~206934-2~~
OBSOLETE	10	NO	NO	NO	.150±.003	.220	~~206934-1~~

THIS DRAWING IS A CONTROLLED DOCUMENT.

DIMENSIONS: INCHES

TOLERANCES UNLESS OTHERWISE SPECIFIED:
0 PLC ± –
1 PLC ± –
2 PLC ± –
3 PLC ± .005
4 PLC ± –
ANGLES ± –

MATERIAL: SEE CALLOUT

FINISH: CONTACT: 2

DWN J.GALLUCCI 5-30-91
CHK W.G.LENKER 4-14-92
APVD K.BEAVER 4-14-92

PRODUCT SPEC 108-10024
APPLICATION SPEC —
WEIGHT —

TE Connectivity

NAME: RECEPTACLE ASSEMBLY, POSTED, STD SEX, SERIES 1, 23-37, CPC
–

SIZE A1 | CAGE CODE 00779 | DRAWING NO C-206934 | RESTRICTED TO —

CUSTOMER DRAWING | SCALE 2:1 | SHEET 1 OF 1 | REV AK

4805 (1/15)