THIS DRAWING IS UNPUBLISHED. RELEASED FOR PUBLICATION APR2014
© COPYRIGHT 2014 BY - TE CONNECTIVITY INDIA PVT LTD ALL RIGHTS RESERVED.

REVISIONS

P	LTR	DESCRIPTION	DATE	DWN	APVD
	A	NEW RELEASE	9APR2014	GG	RK
	B	ECR-16-002495	18FEB2016	KG	RK

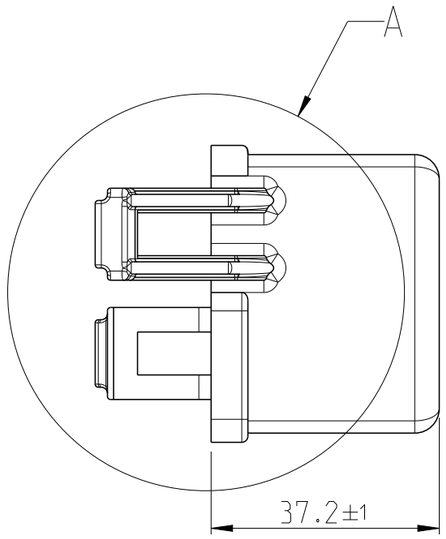

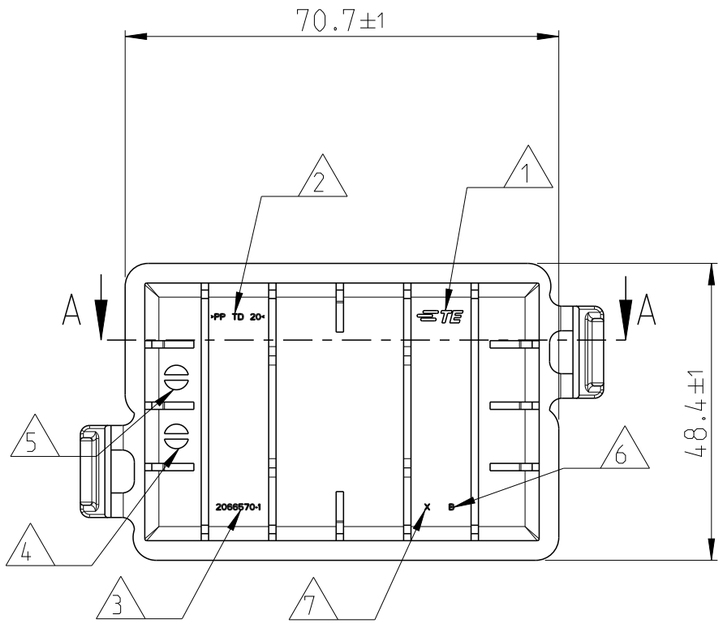

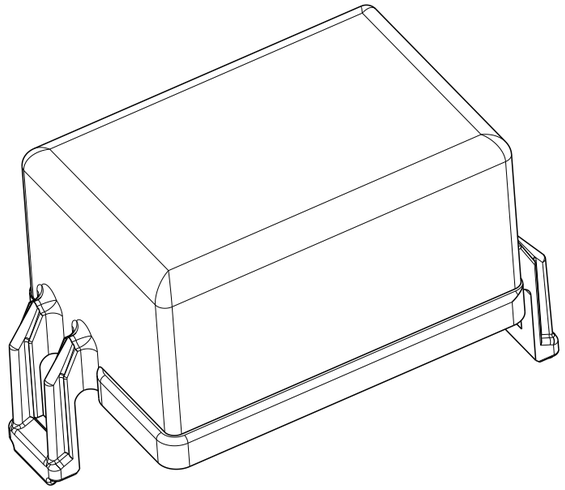

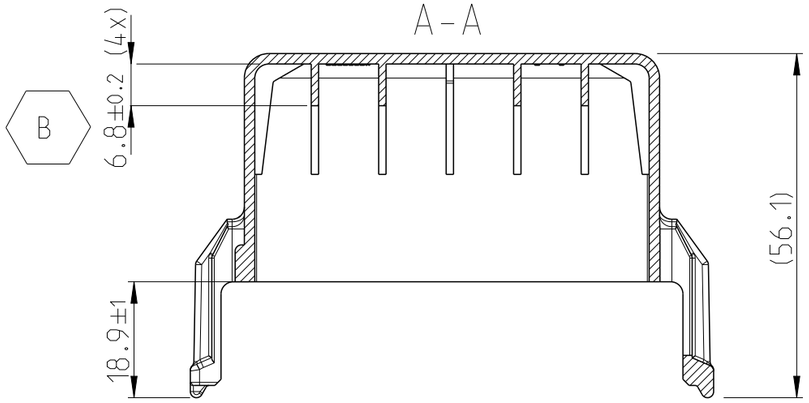

NOTES :-

1. TE LOGO.
2. MATERIAL IDENTIFICATION.
3. TE PART NO.
4. PRODUCTION MONTH CODE.
5. PRODUCTION YEAR CODE.
6. PART REVISION.
7. TOOL CAVITY MARKING.

8. 15%MAX PERMITTED REGARDING MATERIAL PROCESSED IN CLOSED LOOP.

9. QIP DIMENSION.

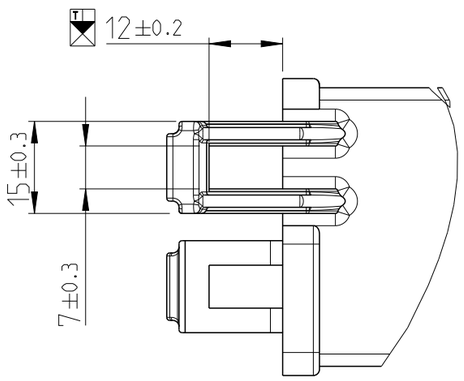

DETAIL A
(2 PLACES) 1:1

PART NUMBER	TE REV	DESCRIPTION	MATERIAL	COLOUR	ITEM
2066570-1	B	Top Cover Small,S101, Engine Compt FRB	PP TD 20%	BLACK	1

THIS DRAWING IS A CONTROLLED DOCUMENT.

DIMENSIONS: mm

TOLERANCES UNLESS OTHERWISE SPECIFIED:
0 PLC ±-
1 PLC ±-
2 PLC ±-
3 PLC ±-
4 PLC ±-
ANGLES ±-

MATERIAL: AS PER TABLE
FINISH: -

DWN GEETA G 09APR2014
CHK RAJESH K 09APR2014
APVD RAMESH K 09APR2014
PRODUCT SPEC -
APPLICATION SPEC -
WEIGHT 25 gms

TE Connectivity

NAME: TOP COVER SMALL, S101 ENGINE COMPT FRB

SIZE	CAGE CODE	DRAWING NO	RESTRICTED TO
A3	-	C-2066570	-

SCALE 1:1 SHEET 1 OF 1 REV B

1470-19 (3/13)