DRAWING MADE IN AMERICAN PROJECTION

© 1971 BY AMP INCORPORATED. ALL RIGHTS RESERVED. AMP PRODUCTS COVERED BY PATENTS AND/OR PATENTS PENDING.

Unpublished copy not to be reproduced nor published without written permission of AMP Incorporated

REVISIONS				
ZONE	LTR	DESCRIPTION	DATE	APPROVED
	A	REV. PER ECN B-774	2/15/73	
	B	REV PER ECN C-878	3/19/74	
	C	REV. PER ECN D-019	5/15/74	
	D	REV. PER ECN D-105	7/2/74	
	E	REV PER ECN DF-0021, DF-0160 & B2676	1-13-88	EAM
	F	ECO-08-023688 PY	11-08	BW

1 APPROPRIATE MIL. P/N (KIT) IS MARKED ON PACKAGE

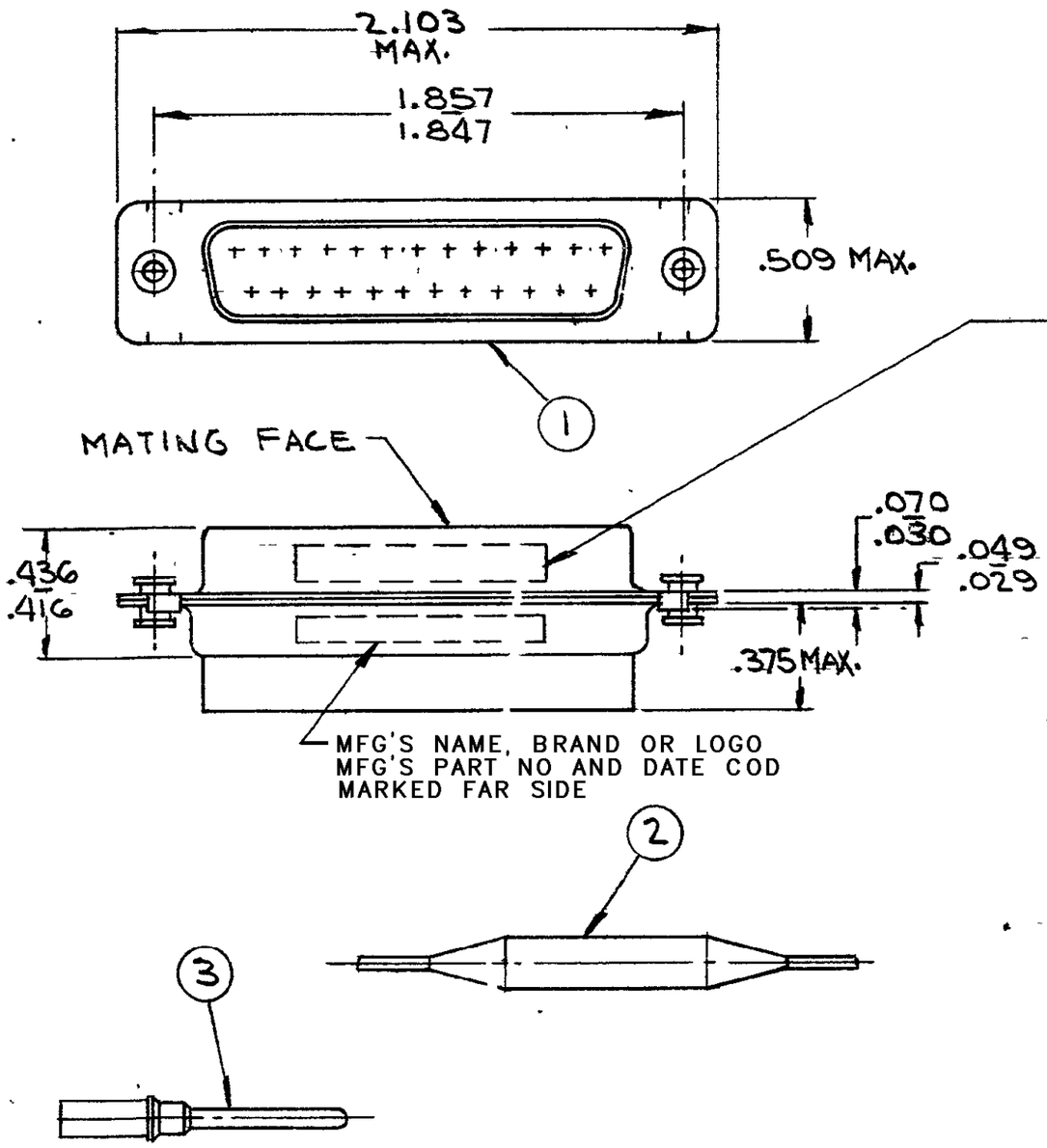

SUPSD BY 205487-2 & 91067-2	SUPSD BY 205413-1 & 91067-2					
X	–	–	MILITARY P/N M24308/4-315F MARKED ON PACKAGE			
–	X	–	MILITARY P/N M24308/4-304F MARKED ON PACKAGE			
28	28	–	B	205089-1	CONTACT, PIN - SIZE 20	3
1	–	1	B	91067-2	INSERTION / EXTRACTION TOOL	2
1	1	1	B	205413-1	PLUG ASSY, SIZE #3	1
-3	-2	-1	DWG SIZE	NUMBER	NAME	ITEM NO.
205487	205487	205487				

1

UNLESS OTHERWISE SPECIFIED DIMENSIONS ARE IN INCHES
TOLERANCES ON:
DECIMALS ±
ANGLES ±

MATERIAL

CONTRACT NO.
DR. 5/10/71
CHK 5/12/71
APPD 5-13-71
REL 5/13/71
DSGN APPD
OTHER APPD

AMP INCORPORATED
HARRISBURG, PENNSYLVANIA

NAME KIT, "HDM" SERIES, PLUG, SIZE #3

SIZE	CODE IDENT NO.	NUMBER	REV
B	00779	205487	F

SCALE | SHEET 1 OF 1

CUSTOMER DRAWING

LOC DF

PRINT TEST

AMP 1470-1 REV (7/68)