THIS DRAWING IS UNPUBLISHED. RELEASED FOR PUBLICATION 20
© COPYRIGHT 20 BY TYCO ELECTRONICS CORPORATION, ALL RIGHTS RESERVED.

LOC	DIST
ES	00

REVISIONS

P	LTR	DESCRIPTION	DATE	DWN	APVD
	A	RELEASED	26NOV2009	J.C	A.G
	A1	ECR-22-132353	14MAR2022	S.X	Z.J

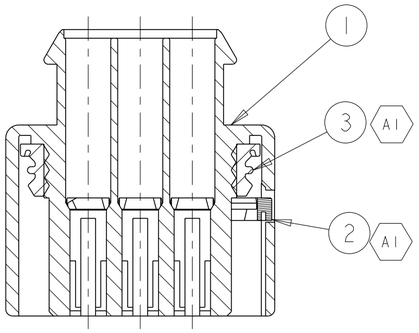

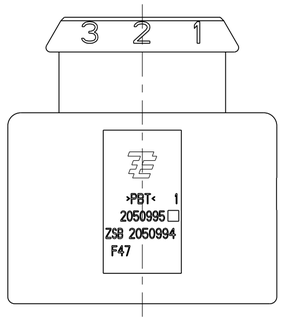

NOTE:
1 CONDITION AS SUPPLIED:
  ITEM 3 IS IN PRE-LOCKED POSITION
2 BULKED PACKAGED
3 TERMINAL 964273-2 WITH SEAL 963292-1

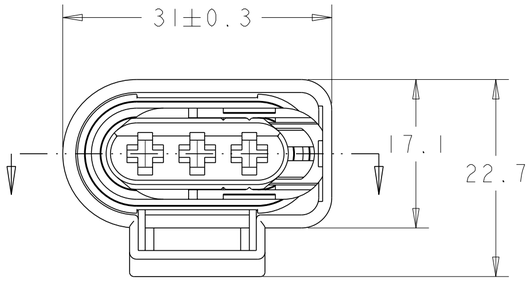

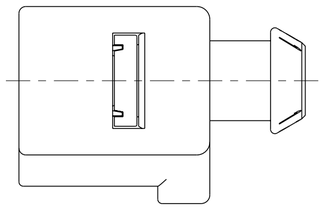

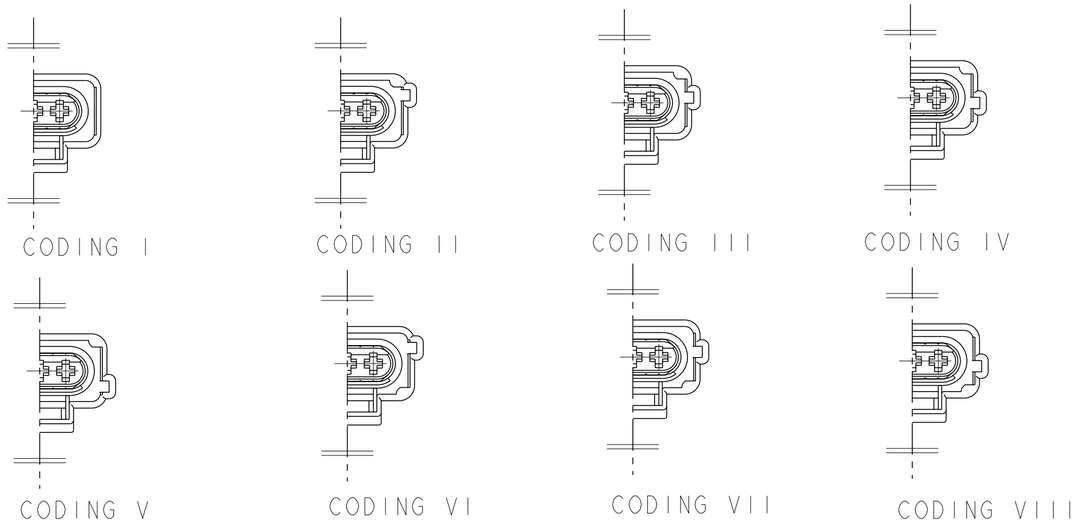

CODING	ASSY NO	MATERIAL	COLOR FINISH	DESCRIPTION	Q'TY	ITEM NO
VIII	2050994-2	MVQ	ORANGE RAL2004	SEAL RING,3POSN	1	3
		PBT GF10	VIOLET RAL 4006	PLUG DBL PL,3POSN	1	2
		PBT	GREY RAL7036	PLUG HSG,3POSN	1	1
I	2050994-1	MVQ	ORANGE RAL2004	SEL RING,3POSN	1	3
		PBT GF10	VIOLET RAL 4006	PLUG DBL PL,3POSN	1	2
		PBT	BLACK RAL9011	PLUG HSG,3POSN	1	1

THIS DRAWING IS A CONTROLLED DOCUMENT FOR TYCO ELECTRONICS CORPORATION. IT IS SUBJECT TO CHANGE AND THE CONTROLLING ENGINEERING ORGANIZATION SHOULD BE CONTACTED FOR THE LATEST REVISION.

DIMENSIONS: mm

TOLERANCES UNLESS OTHERWISE SPECIFIED: ±0.15

0 PLC	±-
1 PLC	±0.5
2 PLC	±0.13
3 PLC	±0.013
4 PLC	±0.0001
ANGLES	±-

MATERIAL: SEE TABLE

FINISH: -

DWN J.CHEN 25NOV2009
CHK A.GUANCO 26NOV1009
APVD A.GUANCO 26NOV2009
PRODUCT SPEC -
APPLICATION SPEC -
WEIGHT -

Tyco Electronics
Tyco Electronics
Shanghai, China

NAME
PLUG HOUSING ASSMBLY,3POSN
SEALED JPT PLUG CONNECTOR
-

SIZE	CAGE CODE	DRAWING NO	RESTRICTED TO
A2	00779	C-2050994	-

CUSTOMER DRAWING | SCALE 2:1 | SHEET 1 OF 1 | REV A1

printed on 14 Mar 2022 13:56 (China Standard Time) from TE471202