THIS DRAWING IS UNPUBLISHED. RELEASED FOR PUBLICATION AUG ,2006.
© COPYRIGHT – BY TYCO ELECTRONICS CORPORATION. ALL RIGHTS RESERVED.

LOC	DIST
DW	—

REVISIONS

P	LTR	DESCRIPTION	DATE	DWN	APVD
	A	RELEASED.	25MAY11	JC	WK

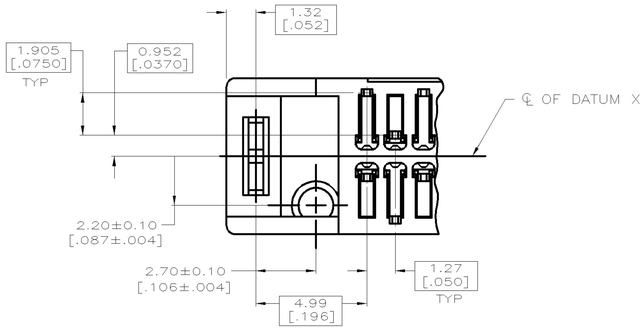

DETAIL D
SCALE 8:1

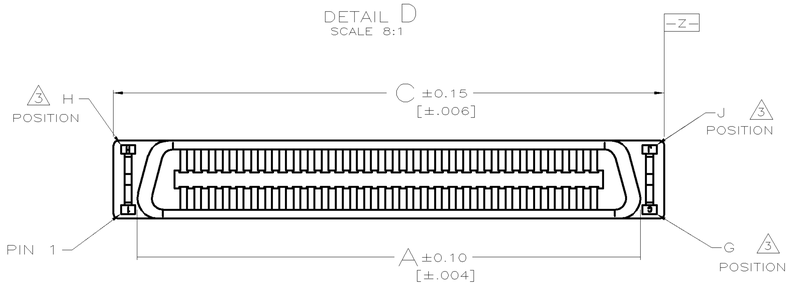

NOTE:
1. MATERIAL:
   HOUSING: LCP, MOLDING COMPOUND, UL 94V–0, BLACK COLOR.
   CONTACTS: PHOSPHOR BRONZE.
   BOARDLOCKS: BRASS.

2. FINISH:
   CONTACTS: (SEE TABLE) GOLD PLATED ON CONTACT AREA,
   3.81μm [150μ"] MIN. MATTE–TIN ON SOLDERTAIL,
   1.27μm [50μ"] MIN. NICKEL UNDERPLATED OVERALL.
   BOARDLOCKS: 3.81μm [150μ"] MIN. TIN–Cu OVER
   1.27μm [50μ"] MIN. UNDERPLATED.

3. G, J, H INDICATE NUMBER OF POSITION MARKED ON ASSEMBLY. ALSO SEE TABLE.

4. ALL DIMENSIONS SHOWN ARE MAXIMUM UNLESS OTHERWISE SPECIFIED.

5. RETENTION LEGS NOT PRESENT.

6. TOP OF RETENTION LEG MAY NOT PROTRUDE ABOVE THIS SURFACE.

7. HOUSING BOW UP TO 0.30 [.012] ALLOWED.

8. 60 POSITION AS SHOWN.

9. WAVE SOLDER CAPABLE TO 265°C PER TEST SPEC. 109–202, CONDITION B.

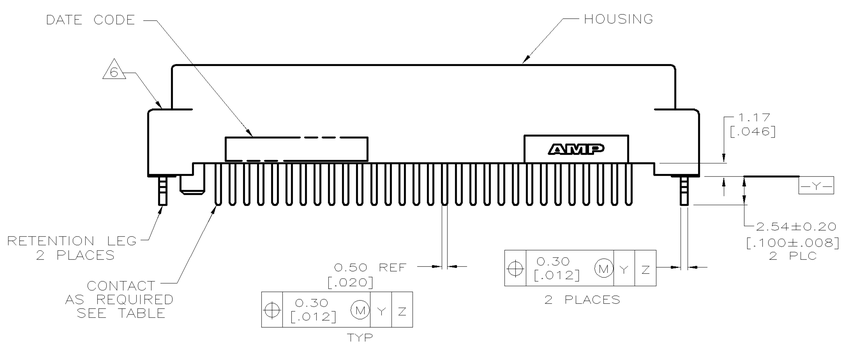

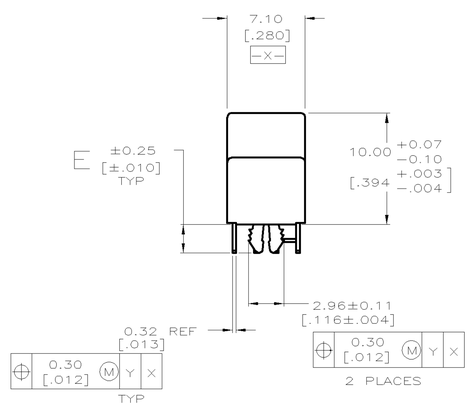

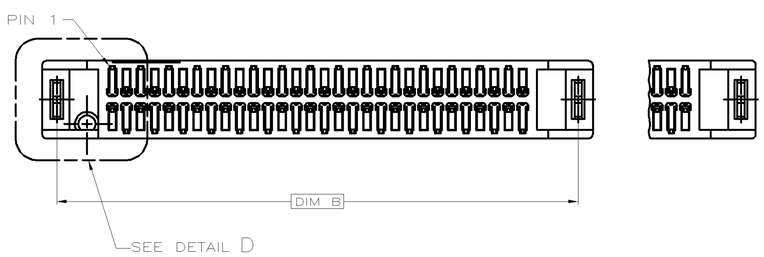

PCB THICKNESS	E	C	B	A	G 3	J 3	H 3	CONTACT PLATED	PART NUMBER	POS.
0.80–1.60 [.031–.063]	2.54 [.100]	62.15 [2.447]	59.51 [2.343]	57.87 [2.278]	40	80	41	0.762μm[30μ"]	2041414–9	80 5

THIS DRAWING IS A CONTROLLED DOCUMENT.

DIMENSIONS: MM

TOLERANCES UNLESS OTHERWISE SPECIFIED:
0 PLC ± –
1 PLC ± –
2 PLC ± – 4
3 PLC ± –
4 PLC ± –
ANGLES ± –

MATERIAL: SEE NOTE
FINISH: SEE NOTE

DWN J. CHEN 25MAY2011
CHK S. CHIEN 25MAY2011
APVD W. KODAMA 25MAY2011
PRODUCT SPEC 108–1367
QUALIFICATION TEST REPORT —
WEIGHT —

TE Connectivity

NAME
PLUG ASSEMBLY, VERTICAL BOARD–TO–BOARD, CHAMP .050, SERIES I

SIZE	CAGE CODE	DRAWING NO	RESTRICTED TO
A3	00779	C–2041414	—

CUSTOMER DRAWING | SCALE — | SHEET 1 OF 3 | REV A

THIS DRAWING IS UNPUBLISHED. RELEASED FOR PUBLICATION AUG ,2006.
© COPYRIGHT – BY TYCO ELECTRONICS CORPORATION. ALL RIGHTS RESERVED.

LOC	DIST
DW	—

REVISIONS

P	LTR	DESCRIPTION	DATE	DWN	APVD
		SEE SHEET 1.			

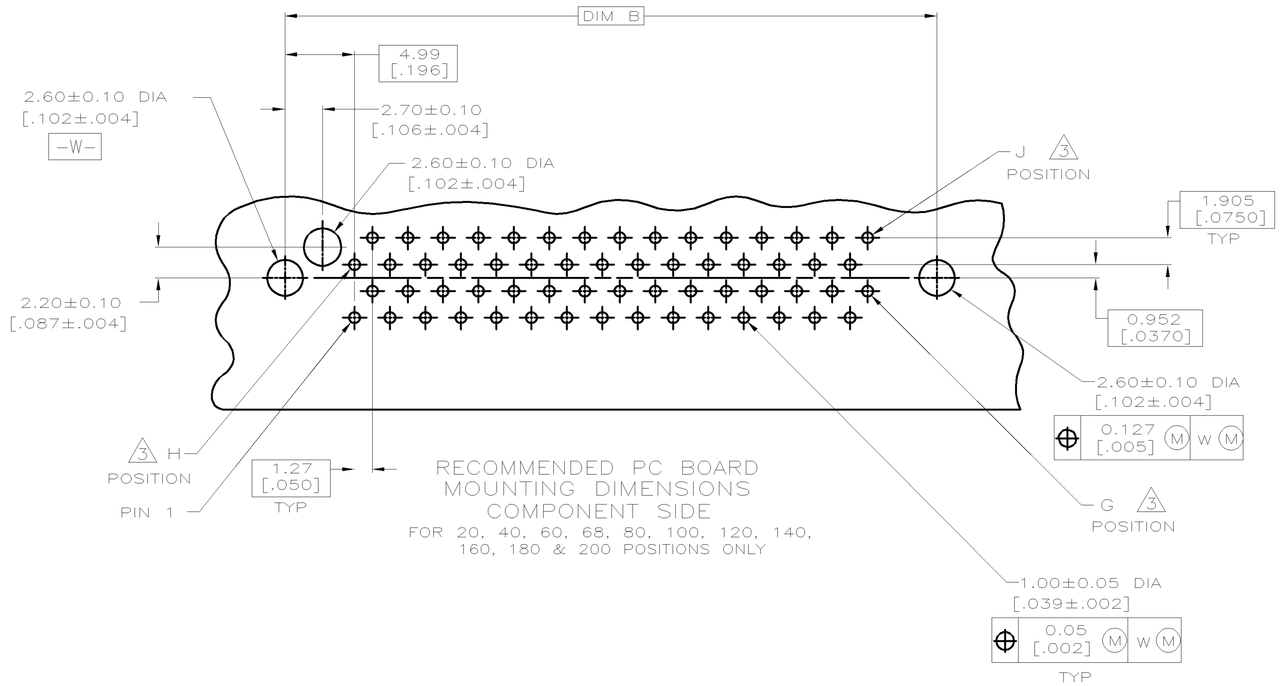

RECOMMENDED PC BOARD
MOUNTING DIMENSIONS
COMPONENT SIDE
FOR 20, 40, 60, 68, 80, 100, 120, 140,
160, 180 & 200 POSITIONS ONLY

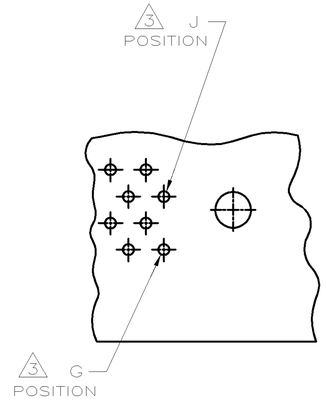

FOR 50 AND 130
POSITIONS ONLY

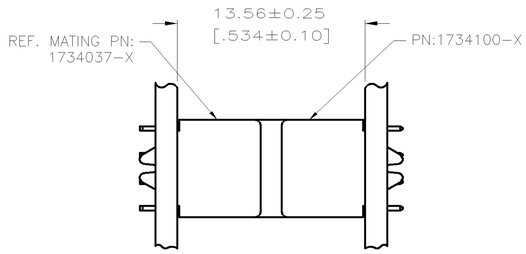

VERTICAL PLUG ASSEMBLY MATED
TO VERTICAL RECEPTACLE ASSEMBLY

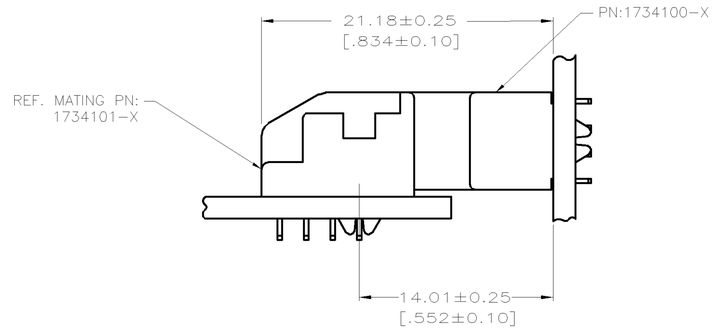

VERTICAL PLUG ASSEMBLY MATED
TO RIGHT ANGLE RECEPTACLE ASSEMBLY

THIS DRAWING IS A CONTROLLED DOCUMENT.

DIMENSIONS: MM

TOLERANCES UNLESS OTHERWISE SPECIFIED:

0 PLC	± –
1 PLC	± –
2 PLC	± –
3 PLC	± –
4 PLC	± –
ANGLES	± –

MATERIAL –

FINISH –

DWN
CHK
APVD
PRODUCT SPEC
QUALIFICATION TEST REPORT
WEIGHT

TE Connectivity

NAME
PLUG ASSEMBLY, VERTICAL
BOARD-TO-BOARD,
CHAMP .050, SERIES I

SIZE	CAGE CODE	DRAWING NO	RESTRICTED TO
A3	00779	C-2041414	—

CUSTOMER DRAWING

SCALE	SHEET	REV
—	2 OF 3	A

THIS DRAWING IS UNPUBLISHED. RELEASED FOR PUBLICATION AUG ,2006.
© COPYRIGHT – BY TYCO ELECTRONICS CORPORATION. ALL RIGHTS RESERVED.

LOC	DIST
DW	—

REVISIONS

P	LTR	DESCRIPTION	DATE	DWN	APVD
		SEE SHEET 1.			

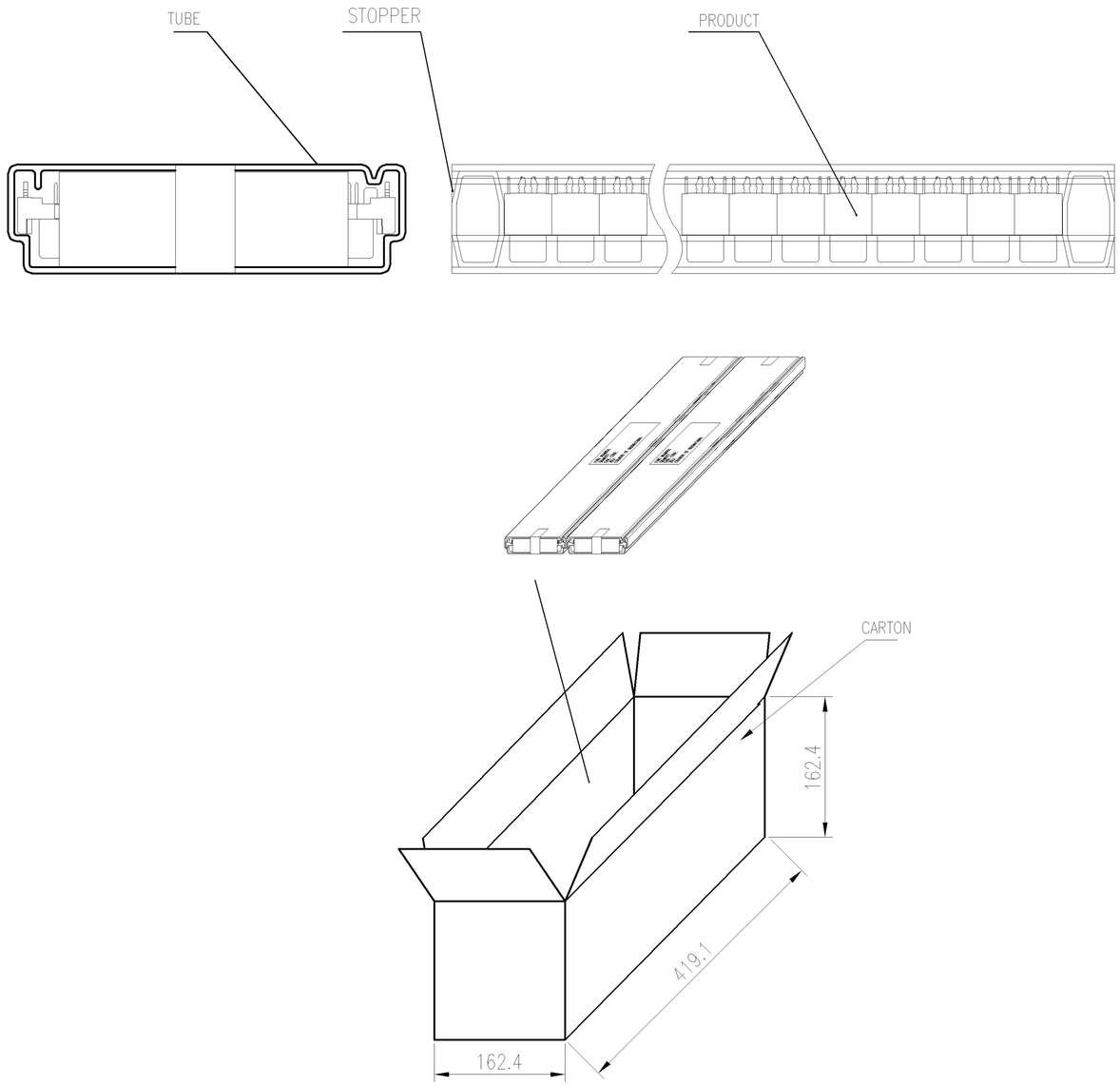

5.28	3.80	54	16	864	2041414–9	80
G.W./CARTON (KG)	N.W./CARTON (KG)	PCS/TUBE	TUBES/CARTON	QUANTITY/CARTON (PCS)	PART NUMBER	POS.

THIS DRAWING IS A CONTROLLED DOCUMENT.

DIMENSIONS: MM

TOLERANCES UNLESS OTHERWISE SPECIFIED:
0 PLC ± –
1 PLC ± –
2 PLC ± –
3 PLC ± –
4 PLC ± –
ANGLES ± –

MATERIAL –

FINISH –

DWN
CHK
APVD
PRODUCT SPEC —
QUALIFICATION TEST REPORT —
WEIGHT —

TE Connectivity

NAME
PLUG ASSEMBLY, VERTICAL BOARD–TO–BOARD, CHAMP .050, SERIES I

SIZE	CAGE CODE	DRAWING NO	RESTRICTED TO
A3	00779	C–2041414	—

CUSTOMER DRAWING

SCALE	SHEET	REV
—	3 OF 3	A