THIS DRAWING IS UNPUBLISHED. RELEASED FOR PUBLICATION AUG ,2006.
© COPYRIGHT – BY TYCO ELECTRONICS CORPORATION. ALL RIGHTS RESERVED.

LOC	DIST
DW	–

REVISIONS

P	LTR	DESCRIPTION	DATE	DWN	APVD
	A1	REVISED (ECR–11–014403)	12JUL11	JC	WK

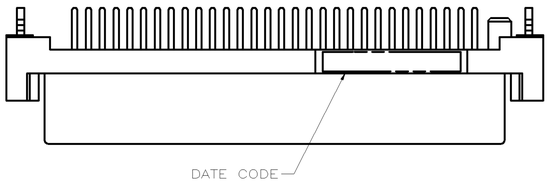

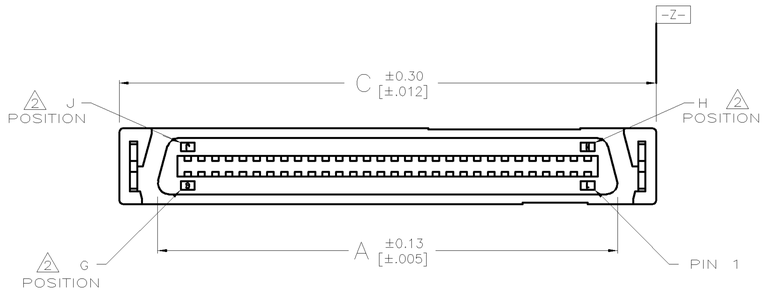

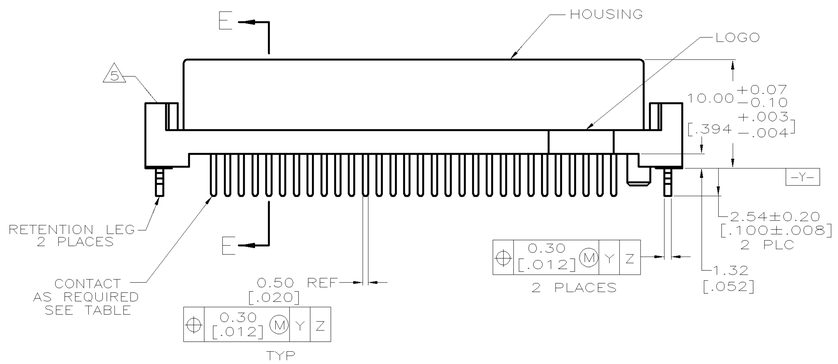

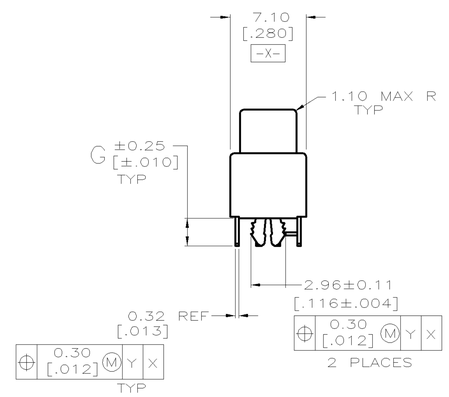

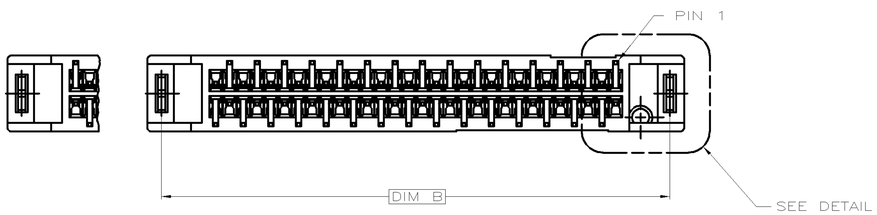

1. MATERIALS:
   HOUSING– PPA RESIN, BLACK, MOLDING COMPOUND.
   CONTACTS– PHOSPHOR BRONZE PLATED WITH 0.762μm [.000030] MINIMUM GOLD IN CONTACT AREA AND 3.8μm [.000150] MINIMUM THICK MATTE TIN ON SOLDER TINES OVER 1.27μm [.000050] MINIMUM THICK NICKEL UNDERPLATE.
   RETENTION LEG– BRASS PLATED WITH 3.8μm [.000150] MINIMUM TIN–Cu OVER 1.3μm [.000051] MINIMUM NICKEL UNDERPLATE.
2. G, J, AND H INDICATE NUMBER OF POSITION MARKED ON ASSEMBLY. ALSO SEE TABLE.
3. ALL DIMENSIONS SHOWN ARE MAXIMUM UNLESS OTHERWISE SPECIFIED.
4. 60 POSITION AS SHOWN.
5. TOP OF RETENTION LEG MAY NOT PROTRUDE ABOVE THIS SURFACE.
6. CONNECTOR WILL ACCOMMODATE MATING PRINTED CIRCUIT BOARD OF 1.6±0.07 [.063±.003] THICKNESS.
7. AIWAYS RoHS/ELV COMPLIANT.
8. WAVE SOLDER CAPABLE TO 265°C PER TE SPEC 109–202, CONDITION B.
9. RECOMMEND CARD EDGE DIM. (PAGE2)

PCB THICKNESS	G	F 9	C	B	A	G 2	J 2	H 2	PART NUMBER	POS.
0.8–1.6 [.031–.063]	2.54 [.100]	76.63 [3.017]	87.55 [3.447]	84.91 [3.343]	80.47 [3.168]	60	120	61	1–2041400–2	120
2.36 [.093]	3.30 [.130]	63.93 [2.517]	74.85 [2.947]	72.21 [2.843]	67.77 [2.668]	50	100	51	1–2041400–1	100
0.8–1.6 [.031–.063]	2.54 [.100]	63.93 [2.517]	74.85 [2.947]	72.21 [2.843]	67.77 [2.668]	50	100	51	1–2041400–0	100

THIS DRAWING IS A CONTROLLED DOCUMENT.

DIMENSIONS: MM

TOLERANCES UNLESS OTHERWISE SPECIFIED:
0 PLC ± –
1 PLC ± –
2 PLC ± – 3
3 PLC ± –
4 PLC ± –
ANGLES ± –

MATERIAL: SEE NOTE
FINISH: SEE NOTE

DWN J. CHEN 26APR2011
CHK S. CHIEN 26APR2011
APVD W. KODAMA 26APR2011
PRODUCT SPEC 108–1367
QUALIFICATION TEST REPORT –
WEIGHT – GRAMS
CUSTOMER DRAWING

TE Connectivity

NAME: RECEPTACLE ASSEMBLY, VERTICAL, BOARD–TO–BOARD, CHAMP.050, SERIES I

SIZE	CAGE CODE	DRAWING NO	RESTRICTED TO
A3	00779	C–2041400	–

SCALE – SHEET 1 OF 3 REV A1

THIS DRAWING IS UNPUBLISHED. RELEASED FOR PUBLICATION AUG ,2006.
© COPYRIGHT – BY TYCO ELECTRONICS CORPORATION. ALL RIGHTS RESERVED.

LOC	DIST
DW	—

REVISIONS

P	LTR	DESCRIPTION	DATE	DWN	APVD
		SEE SHEET 1.			

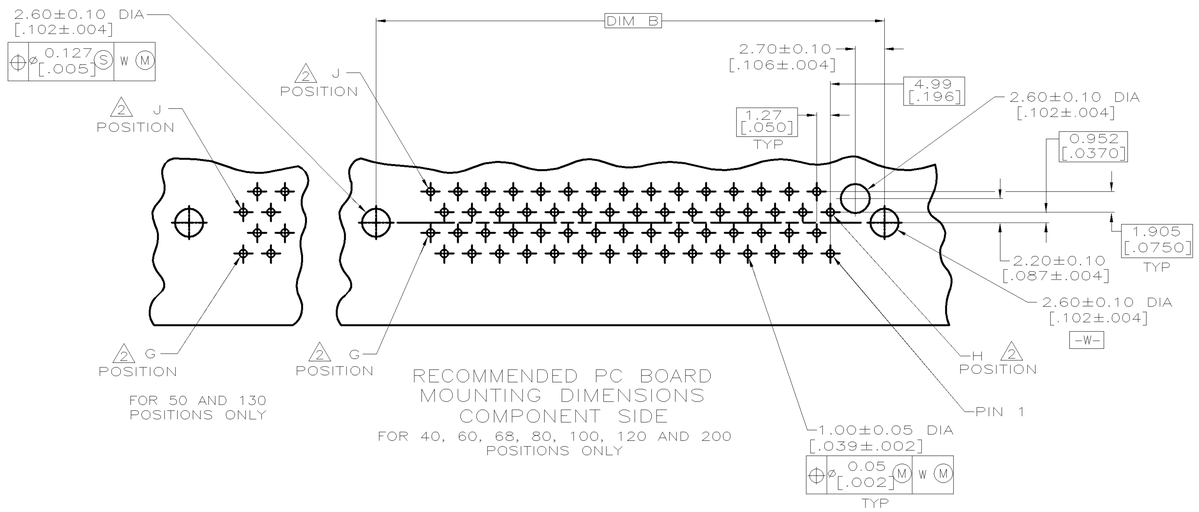

FOR 50 AND 130 POSITIONS ONLY

RECOMMENDED PC BOARD MOUNTING DIMENSIONS COMPONENT SIDE

FOR 40, 60, 68, 80, 100, 120 AND 200 POSITIONS ONLY

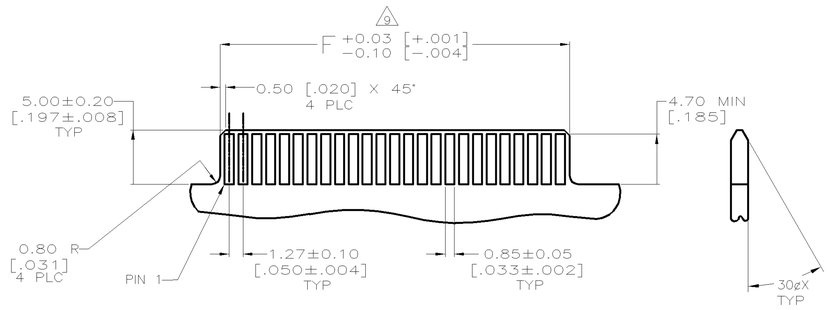

RECOMMENDED CARD EDGE LAYOUT

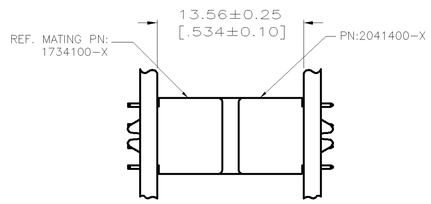

VERTICAL RECEPTACLE ASSEMBLY MATED TO VERTICAL PLUG ASSEMBLY

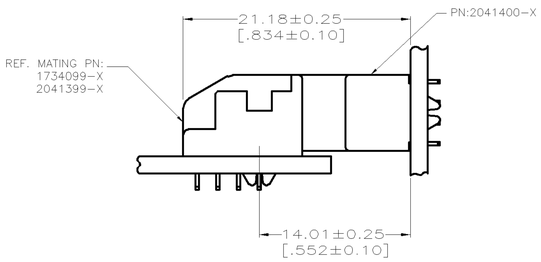

VERTICAL RECEPTACLE ASSEMBLY MATED TO VERTICAL PLUG ASSEMBLY

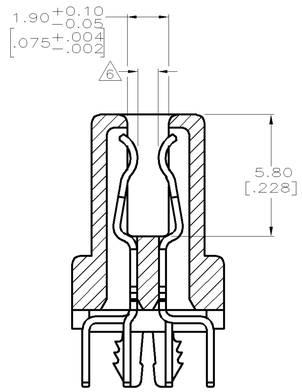

SECTION E–E
SCALE 8:1

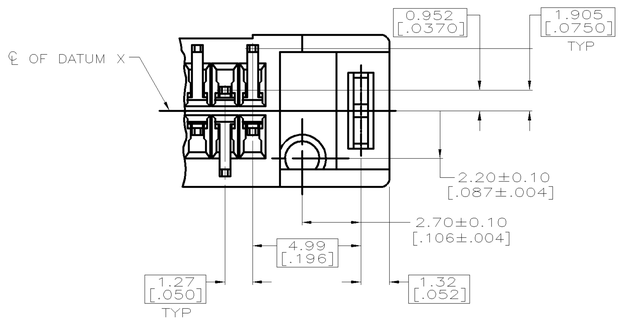

DETAIL D
SCALE 8:1

THIS DRAWING IS A CONTROLLED DOCUMENT.

DIMENSIONS: MM

TOLERANCES UNLESS OTHERWISE SPECIFIED:

0 PLC	± –
1 PLC	± –
2 PLC	± –
3 PLC	± –
4 PLC	± –
ANGLES	± –

MATERIAL –

FINISH –

DWN
CHK
APVD
PRODUCT SPEC —
QUALIFICATION TEST REPORT —
WEIGHT – GRAMS

TE Connectivity

NAME
RECEPTACLE ASSEMBLY, VERTICAL, BOARD–TO–BOARD, CHAMP.050, SERIES I

SIZE	CAGE CODE	DRAWING NO	RESTRICTED TO
A3	00779	C-2041400	—

CUSTOMER DRAWING | SCALE — | SHEET 2 OF 3 | REV A1

THIS DRAWING IS UNPUBLISHED. RELEASED FOR PUBLICATION AUG ,2006.
© COPYRIGHT – BY TYCO ELECTRONICS CORPORATION. ALL RIGHTS RESERVED.

LOC	DIST
DW	–

REVISIONS

P	LTR	DESCRIPTION	DATE	DWN	APVD
		SEE SHEET 1.			

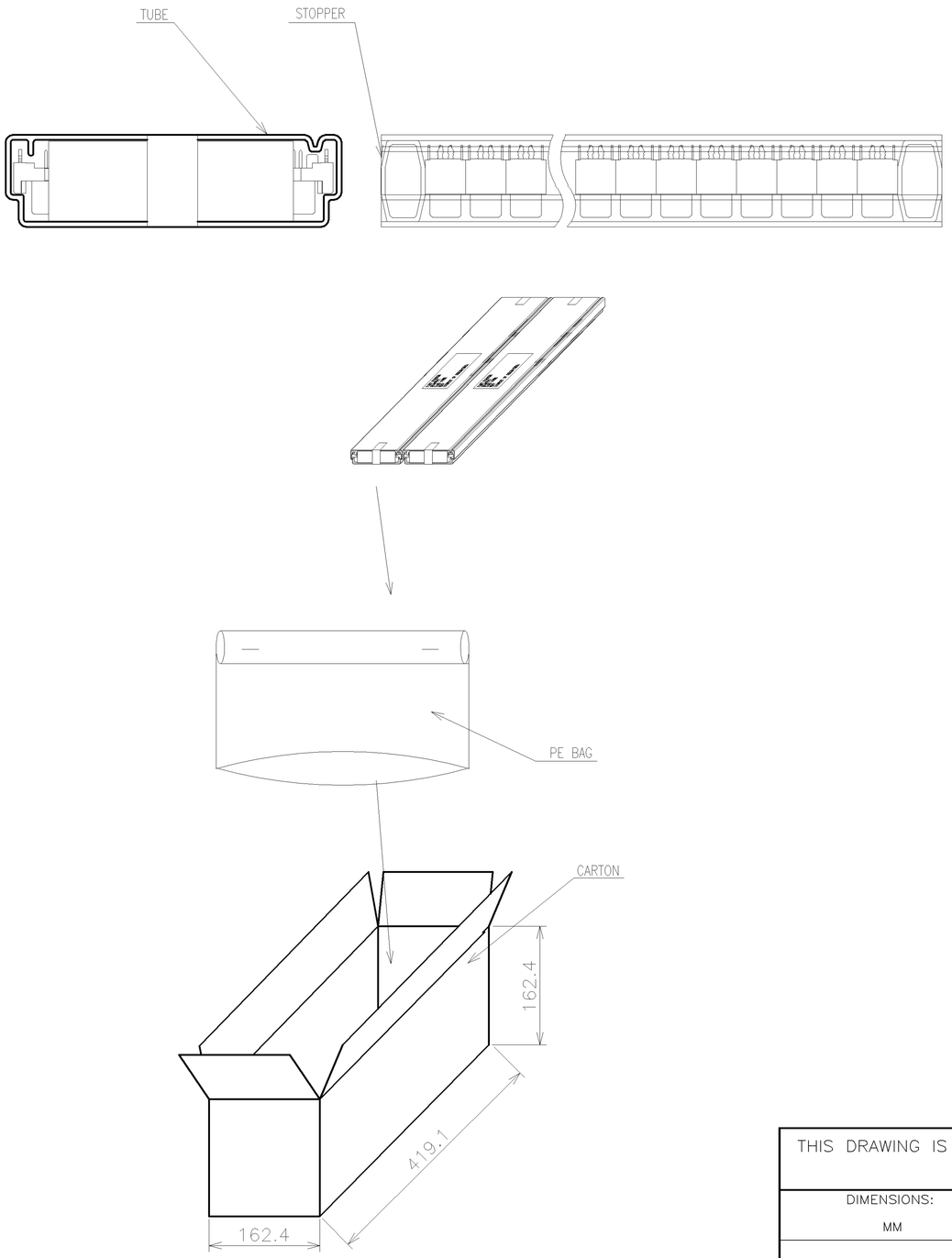

G.W./CARTON (KG)	N.W./CARTON (KG)	PCS/TUBE	TUBES/CARTON	QUANTITY/CARTON (PCS)	PART NUMBER	POS.
4.21	2.89	54	8	432	1–2041400–2	120
6.84	4.92	54	16	864	1–2041400–1 1–2041400–0	100

THIS DRAWING IS A CONTROLLED DOCUMENT.

DIMENSIONS: MM

TOLERANCES UNLESS OTHERWISE SPECIFIED:

0 PLC	± –
1 PLC	± –
2 PLC	± –
3 PLC	± –
4 PLC	± –
ANGLES	± –

MATERIAL –

FINISH –

DWN
CHK
APVD

PRODUCT SPEC –

QUALIFICATION TEST REPORT –

WEIGHT –

CUSTOMER DRAWING

TE Connectivity

NAME

RECEPTACLE ASSEMBLY,
VERTICAL, BOARD–TO–BOARD,
CHAMP.050, SERIES I

SIZE	CAGE CODE	DRAWING NO	RESTRICTED TO
A3	00779	C–2041400	–

SCALE	SHEET	REV
–	3 OF 3	A1