THIS DRAWING IS UNPUBLISHED. RELEASED FOR PUBLICATION 20
© COPYRIGHT 20 BY TYCO ELECTRONICS CORPORATION. ALL RIGHTS RESERVED.

LOC	DIST
DS	-

REVISIONS

P	LTR	DESCRIPTION	DATE	DWN	APVD
	A	RELEASED	26.DEC.'09	KT	HG

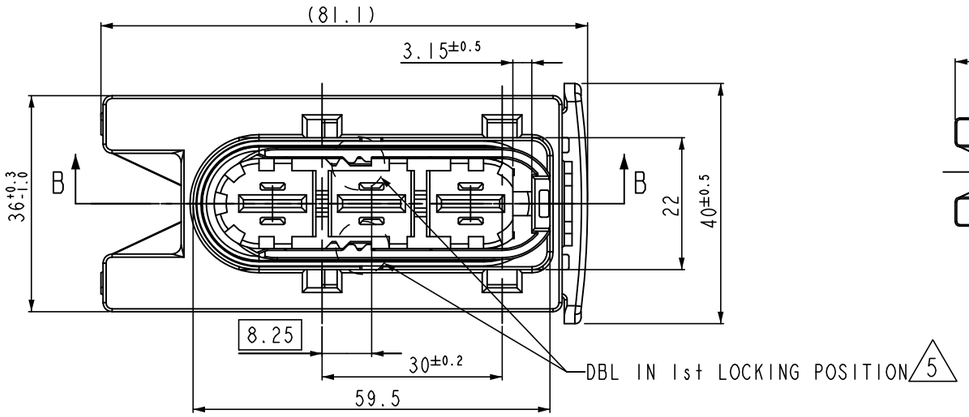

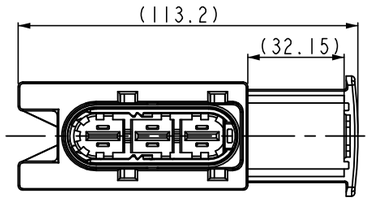

6 SLIDE OPEN VIEW
SCALE 1:2

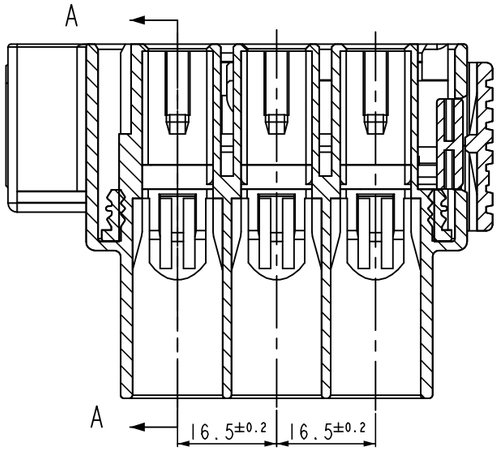

SECTION B-B

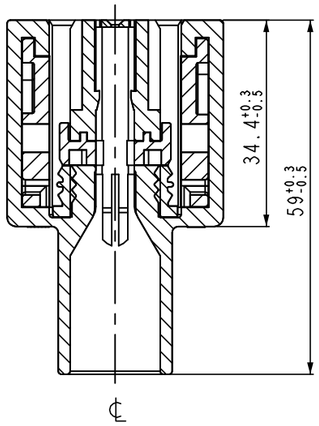

SECTION A-A

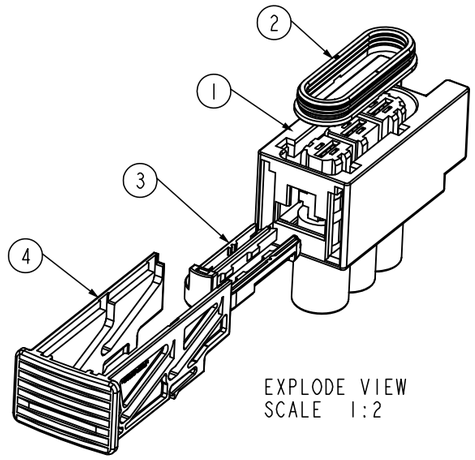

EXPLODE VIEW
SCALE 1:2

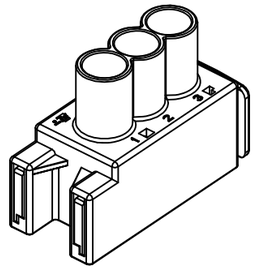

3D VIEW
SCALE 1:2

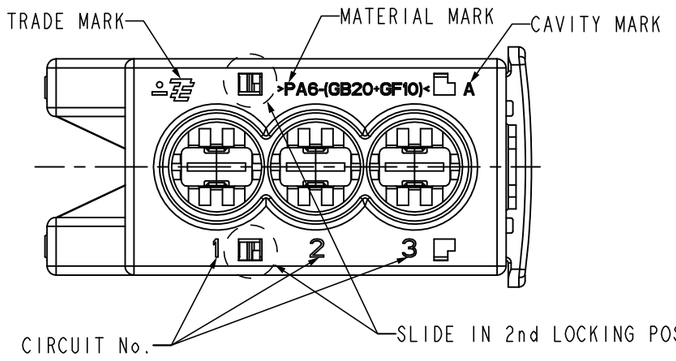

NOTE

1. GENERAL TOLERANCE: ±0.3, ±3°
2. APPLICABLE MATING CONNECTOR P/N: X-2005298-X
3. APPLICABLE CONTACT P/N: 1-967590-1

Conductor		Insulation Diameter	
Nominal Size	Calculated Cross-Section Area (mm^2)	Minimum (mm)	Maximum (mm)
10.0	10.03	5.8	6.6

4. APPLICABLE WIRE SEAL P/N: 1355437-2

5. DELIVERY CONDITION:
DBL HSG IN 1st LOCKING, SLIDE IN 2nd LOCKING POSITION.

6. CONDITION OF BEFORE MATING:
DBL HSG IN 2nd LOCKING, SLIDE IN 1st LOCKING POSITION.

DESCRIPTION	3P SLD PLUG ASSY
ASSY PN	2005301-2

NO	COLOR	MATERIAL	DESCRIPTION	QTY
4	GRAY	PBT-GF20	SLIDE LEVER	1
3	NATURAL	PBT/ASA-GF20	DBL HSG	1
2	ORANGE	SILICON	SEAL	1
1	BLACK	PA6-(GB20+GF10)	PLUG HSG	1

THIS DRAWING IS A CONTROLLED DOCUMENT FOR TYCO ELECTRONICS CORPORATION. IT IS SUBJECT TO CHANGE AND THE CONTROLLING ENGINEERING ORGANIZATION SHOULD BE CONTACTED FOR THE LATEST REVISION.

DIMENSIONS: mm

TOLERANCES UNLESS OTHERWISE SPECIFIED:
0 PLC ±
1 PLC ±
2 PLC ±
3 PLC ±
4 PLC ±
ANGLES ±

MATERIAL: SEE TABLE

FINISH:

DWN: KT JUNG
CHK: JW JUNG
APVD: HG CHO
PRODUCT SPEC: -
APPLICATION SPEC: -
WEIGHT: -

Tyco Electronics
Tyco Electronics
Kyungsan, Korea

NAME: MCP 9.5mm 3P SLD PLUG ASSY FOR EOP

SIZE	CAGE CODE	DRAWING NO	RESTRICTED TO
A3	00779	C-2005301	-

CUSTOMER DRAWING | SCALE 1:1 | SHEET 1 OF 1 | REV A