THIS DRAWING IS UNPUBLISHED. RELEASED FOR PUBLICATION 20
© COPYRIGHT 20 BY TYCO ELECTRONICS CORPORATION. ALL RIGHTS RESERVED.

LOC	DIST
DS	–

REVISIONS

P	LTR	DESCRIPTION	DATE	DWN	APVD
	A	RELEASE	23 JUN'10	SJ	JK

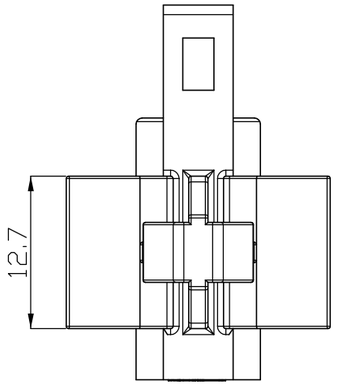

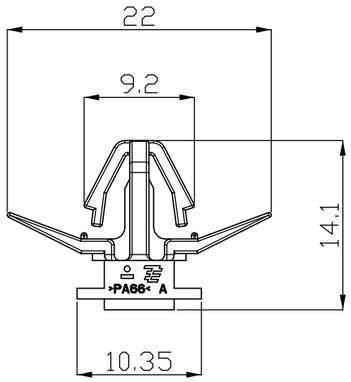

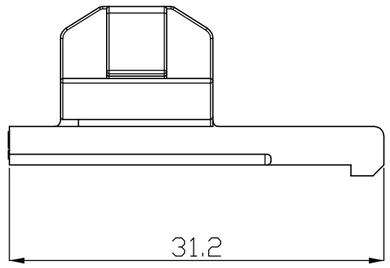

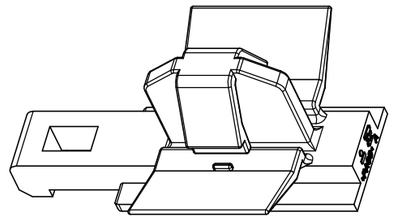

ISOMETRIC VIEW

PANEL HOLE

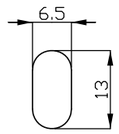

PANEL THICKNESS : 1.5mm

NOTE :
1. GENERAL TOLERANCE : ±0.3,± 0.3°
2. THE MATING PLUG HSG P/N : 1452484

P/N	MATERIAL	COLOR
2005039-2	PA66	BLACK

THIS DRAWING IS A CONTROLLED DOCUMENT FOR TYCO ELECTRONICS CORPORATION IT IS SUBJECT TO CHANGE AND THE CONTROLLING ENGINEERING ORGANIZATION SHOULD BE CONTACTED FOR THE LATEST REVISION.

DIMENSIONS: mm

TOLERANCES UNLESS OTHERWISE SPECIFIED

0 PLC	±-
1 PLC	±0.5
2 PLC	±0.13
3 PLC	±0.013
4 PLC	±0.0001
ANGLES	±-

MATERIAL SEE TABLE

FINISH SEE TABLE

DWN SJ CHOI –
CHK KT LIM –
APVD JK SONG –
PRODUCT SPEC –
APPLICATION SPEC –
WEIGHT –

Tyco Electronics
Tyco Electronics
Kyungsan, Korea

NAME
–
SLOT CLIP FOR FAKRA 2P HSG
–

SIZE	CAGE CODE	DRAWING NO	RESTRICTED TO
A3	00779	C-2005039	–

CUSTOMER DRAWING

SCALE 1:1 SHEET 1 OF 1 REV A

AMP 1470-19 REV 31MAR2000