© 2021 TE Connectivity. All Rights Reserved.

REVISIONS					
P	LTR	DESCRIPTION	DATE	DWN	APVD

1:1

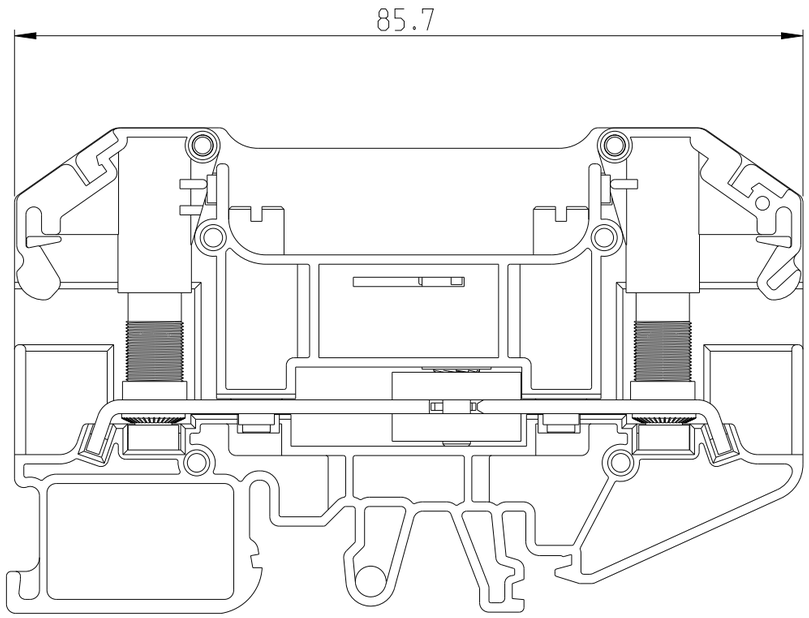

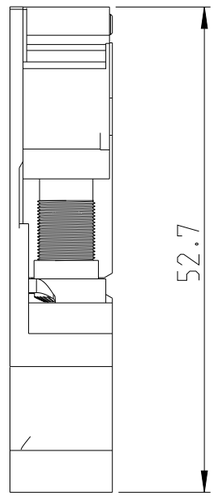

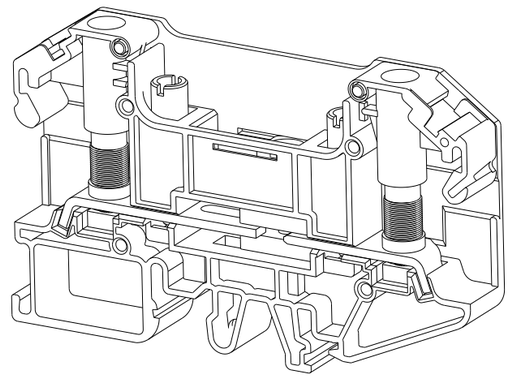

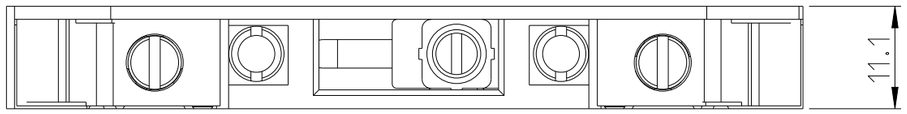

FINISH	MATERIAL	PART NO
–	–	1SNA512124R0000

THIS DRAWING IS A CONTROLLED DOCUMENT.

DIMENSIONS: mm

TOLERANCES UNLESS OTHERWISE SPECIFIED:

0 PLC	±-
1 PLC	±0.1
2 PLC	±0.01
3 PLC	±0.001
4 PLC	±0.0001
ANGLES	±-

MATERIAL –

FINISH –

DWN DYARAL SILVA 20MAY2021

CHK –

APVD –

PRODUCT SPEC –

APPLICATION SPEC –

WEIGHT –

TE Connectivity

NAME RGW 6-ST-1-V0
–
–

SIZE	CAGE CODE	DRAWING NO	RESTRICTED TO
A 3	00779	C-1SNP104143-0200	–

CUSTOMER DRAWING

SCALE 3:2 SHEET 1 OF 1 REV A

1470-19 (3/13)